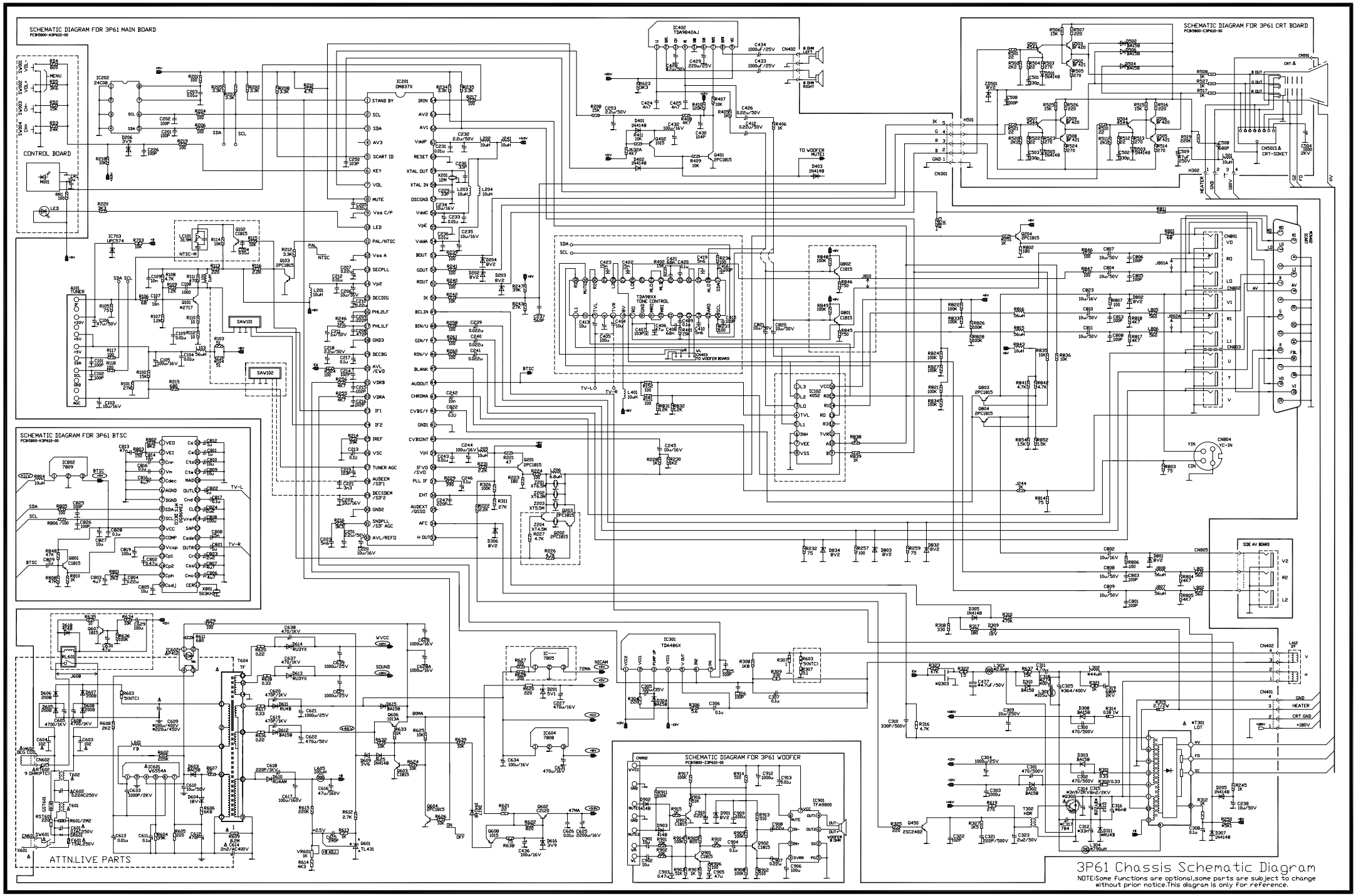

3P61 Chassis Schematic Diagram

NOTE:Some functions are optional,some parts are subject to change without prior notice.This diagram is only for reference.