Elenberg DVDP-2403

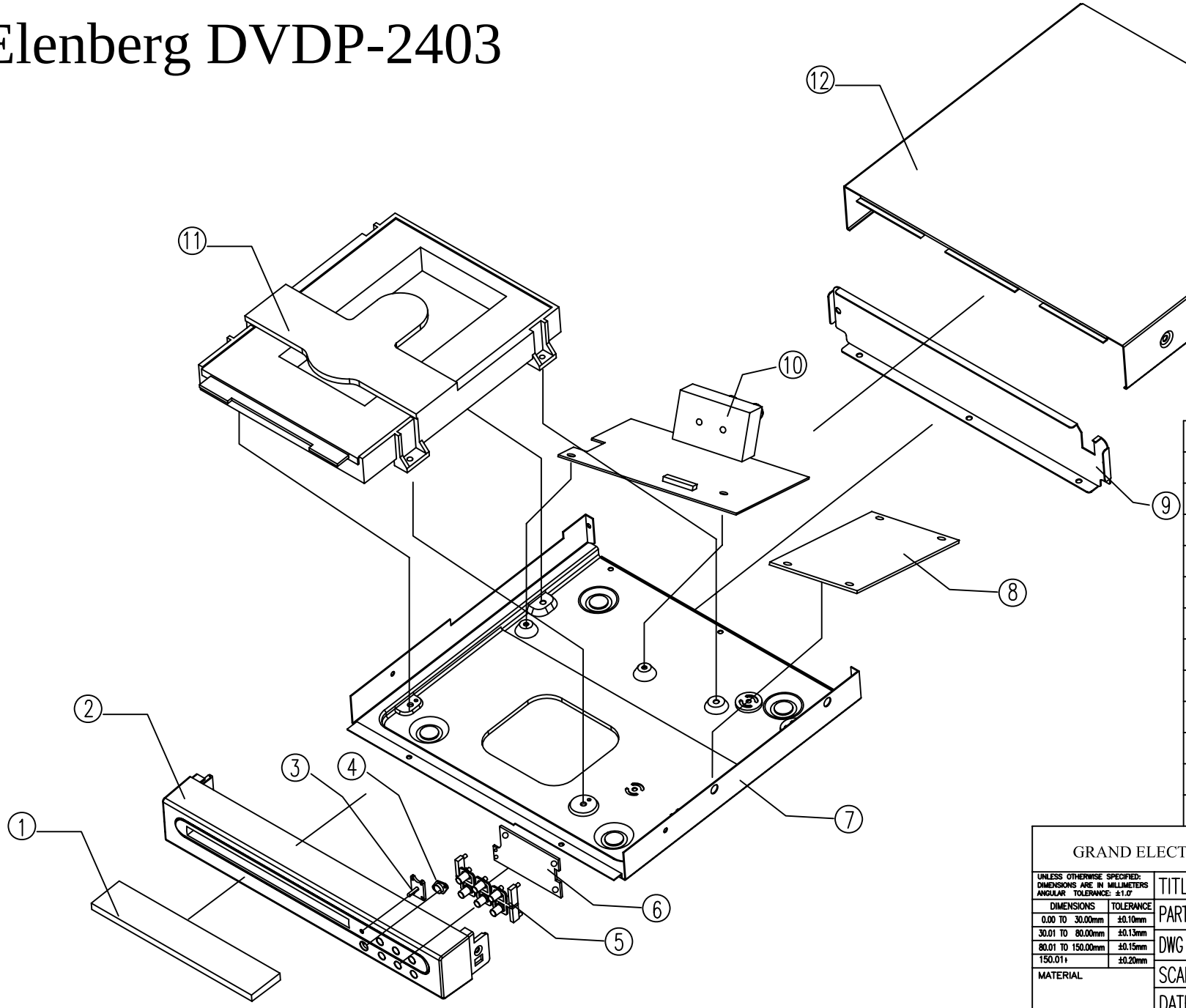

S/N.	PART NAME
12	TOP CABINET
11	LOADER
10	DECODE PCB
9	REAR CABINET
8	POWER PCB
7	BOTTOM CABINET
6	CONTROL PCB
5	KEYS
4	REMOTE CONTROL LENS
3	INDICATION LED LENS
2	PANEL
1	LOADER DOOR

GRAND ELECTRONICS（SHENZHEN）CO.,LTD

UNLESS OTHERWISE SPECIFIED:
DIMENSIONS ARE IN MILLIMETERS
ANGULAR TOLERANCE: ±1.0°

DIMENSIONS	TOLERANCE
0.00 TO 30.00mm	±0.10mm
30.01 TO 80.00mm	±0.13mm
80.01 TO 150.00mm	±0.15mm
150.01+	±0.20mm

MATERIAL

TITLE: DVD-2201

PART NAME: EXPLOSIVE DRAWING

DWG NO:

SIZE:A4

SCALE: 2 : 1 | UNIT:MM | DESIGN: DENG

DATE: 2007-06-27 | APPD: DENG

FILE NAME | SHEET 1/1 | REV

Spare Parts List (DVDP-2403)

Item	**Description**	**QTY**	**Part №** **(Код ЗЧД=Номер ЗЧД)**
1	loader door	1	DVDP-2403-1
2	panel	1	DVDP-2403-2
3	indication led lens	1	DVDP-2403-3
4	remote control lens	1	DVDP-2403-4
5	keys	1	DVDP-2403-5
6	control pcb	1	DVDP-2403-6
7	bottom cabinet	1	DVDP-2403-7
8	power pcb	1	DVDP-2403-8
9	rear cabinet	1	DVDP-2403-9
10	decode pcb	1	DVDP-2403-10
11	loader	1	SF-HD-65 или KHM-313AAA
12	top cabinet	1	DVDP-2403-12
	Remote Control	1	DVDP-2403-13

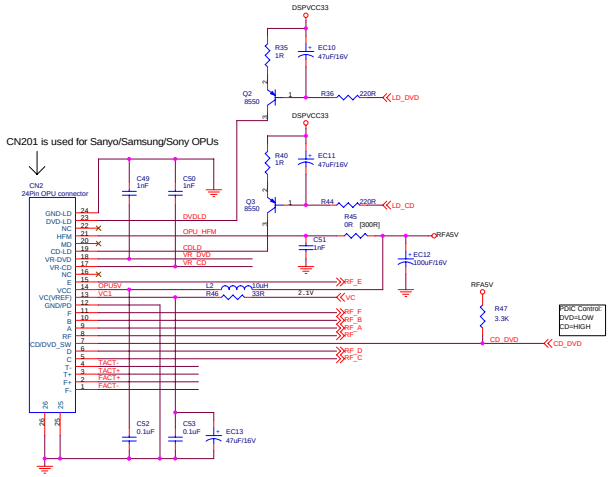

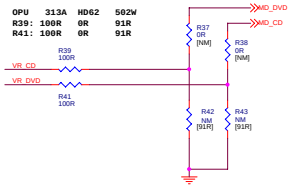

Close to motor driver.

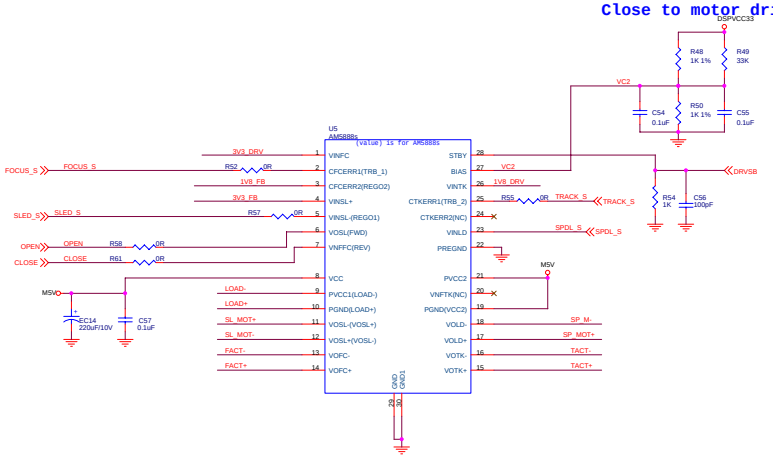

BEMF
Current Type

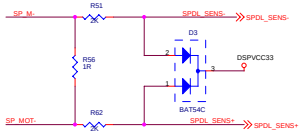

For 5888

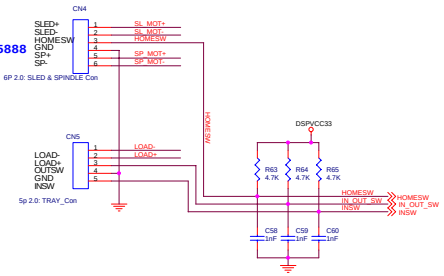

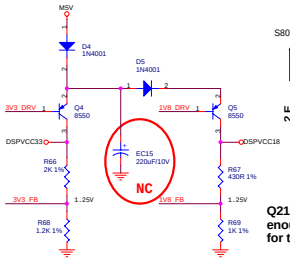

S8050/S8550

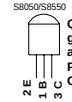

Q210, Q211 must be genuine 8550, such as PHILIPS PSS8550D, Jiangsu Changdian S8550.

Q210, 211 must have enough large pads for thermal spreading

Title	Grand_V962	
Size: Custom	Document Number: Front End & Regulator	Rev: 2.0
Date: Thursday, August 03, 2006	Sheet 3 of 5	

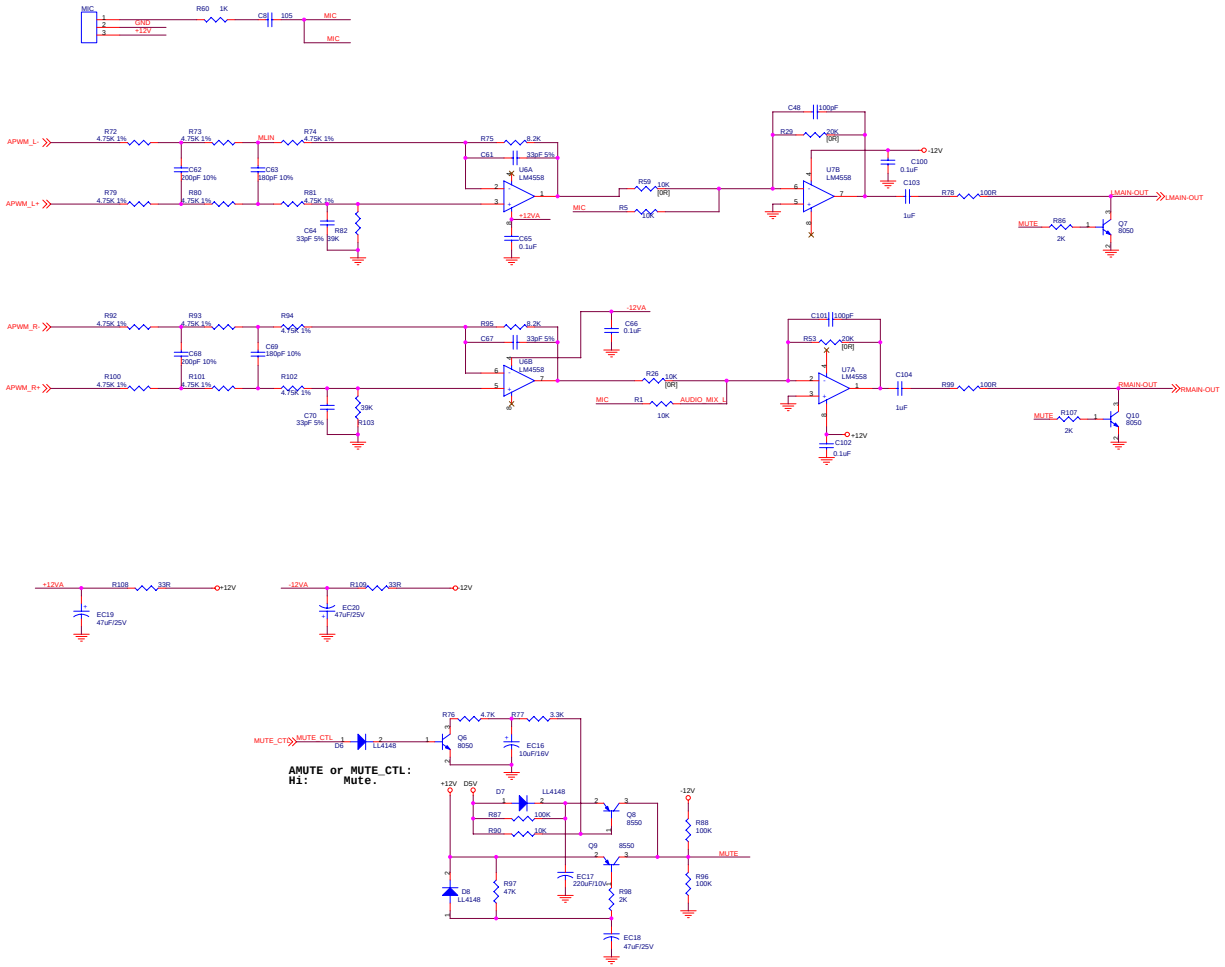

Title	Grand_V962		
Size: Custom	Document Number: Back End		Rev: 2.0
Date: Thursday, August 03, 2006	Sheet 4 of 5		

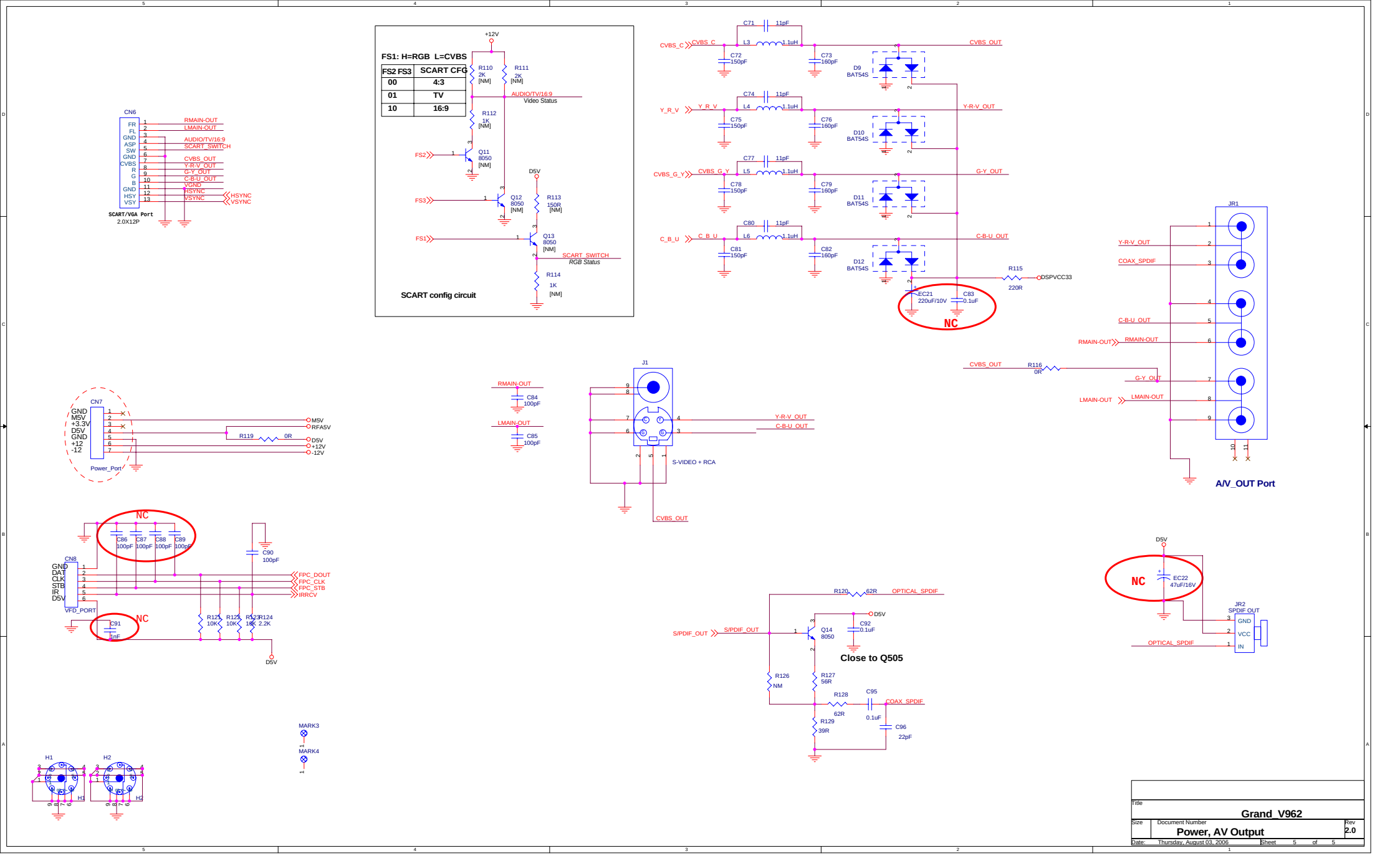
FS1: H=RGB L=CVBS
FS2 FS3 SCART CFG
00 4:3
01 TV
10 16:9
SCART config circuit
CN6
SCART/VGA Port
2.0X12P
CN7
Power_Port
CN8
VFD_PORT
NC
J1
S-VIDEO + RCA
JR1
A/V_OUT Port
JR2
SPDIF OUT
Close to Q505
H1
H2
MARK3
MARK4
Title
Grand_V962
Document Number
Power, AV Output
Rev
2.0
Date: Thursday, August 03, 2006
Sheet 5 of 5

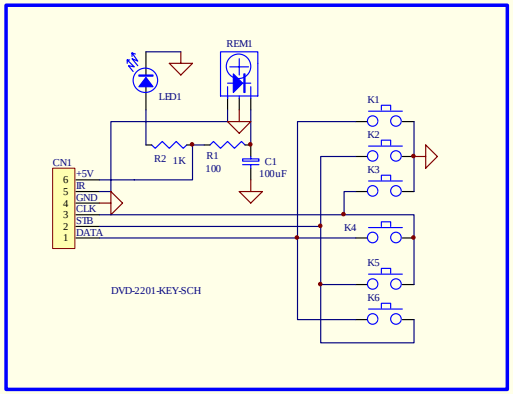

Title			
Size B	Number		Revision
Date: 27-Jun-2007		Sheet of	
File: E:\DVD設計\PCB設計\SCH\GRAND-16V.ddb		Drawn By:	

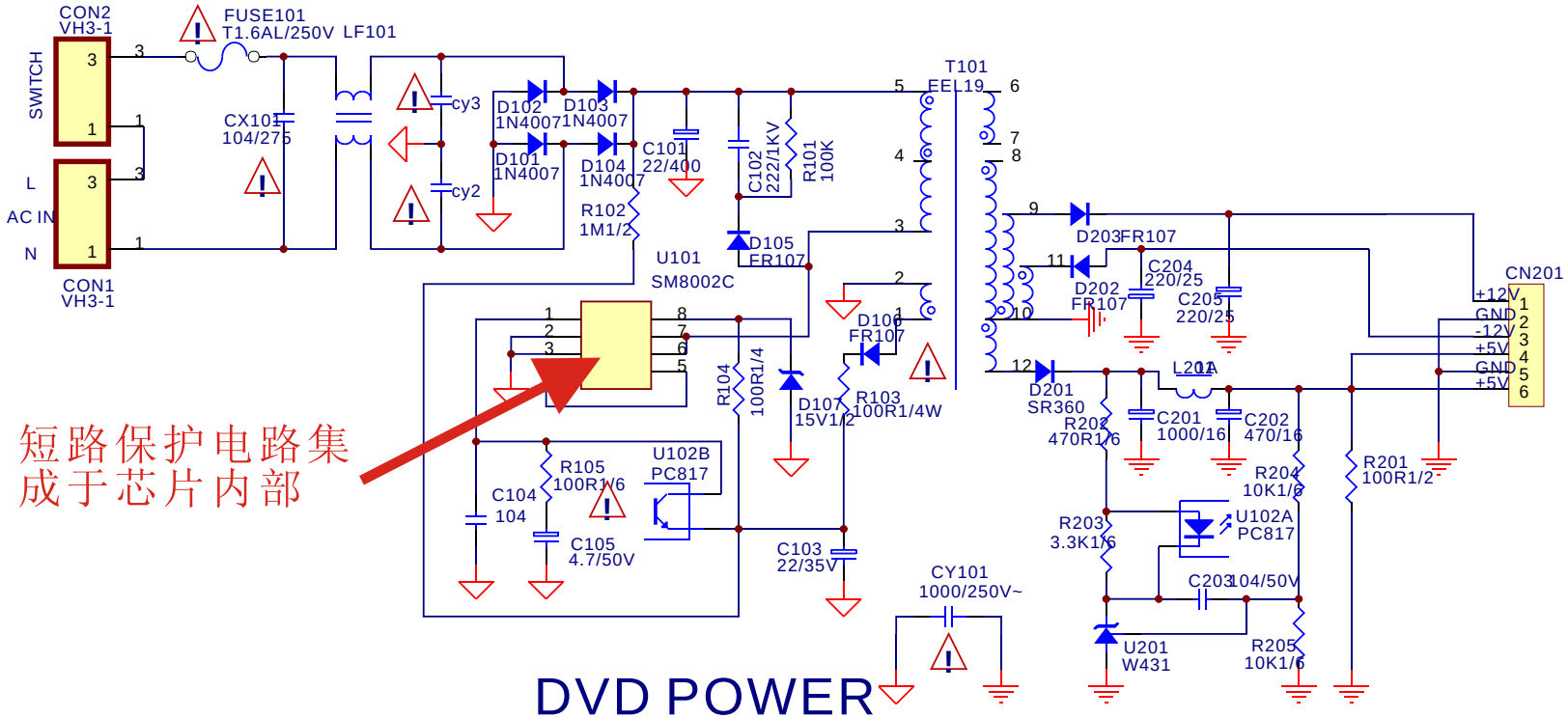

短路保护电路集
成于芯片内部

DVD POWER
GRAND-16V

Title		
Size A4	Number POWER-grand-16V.SCH	Revision 1.0
Date: 12-Sep-2007	Sheet 1 of 1	
File: J:\DVD×EAI \PCB×EAI \SCH\GRAND-16V.ddb		

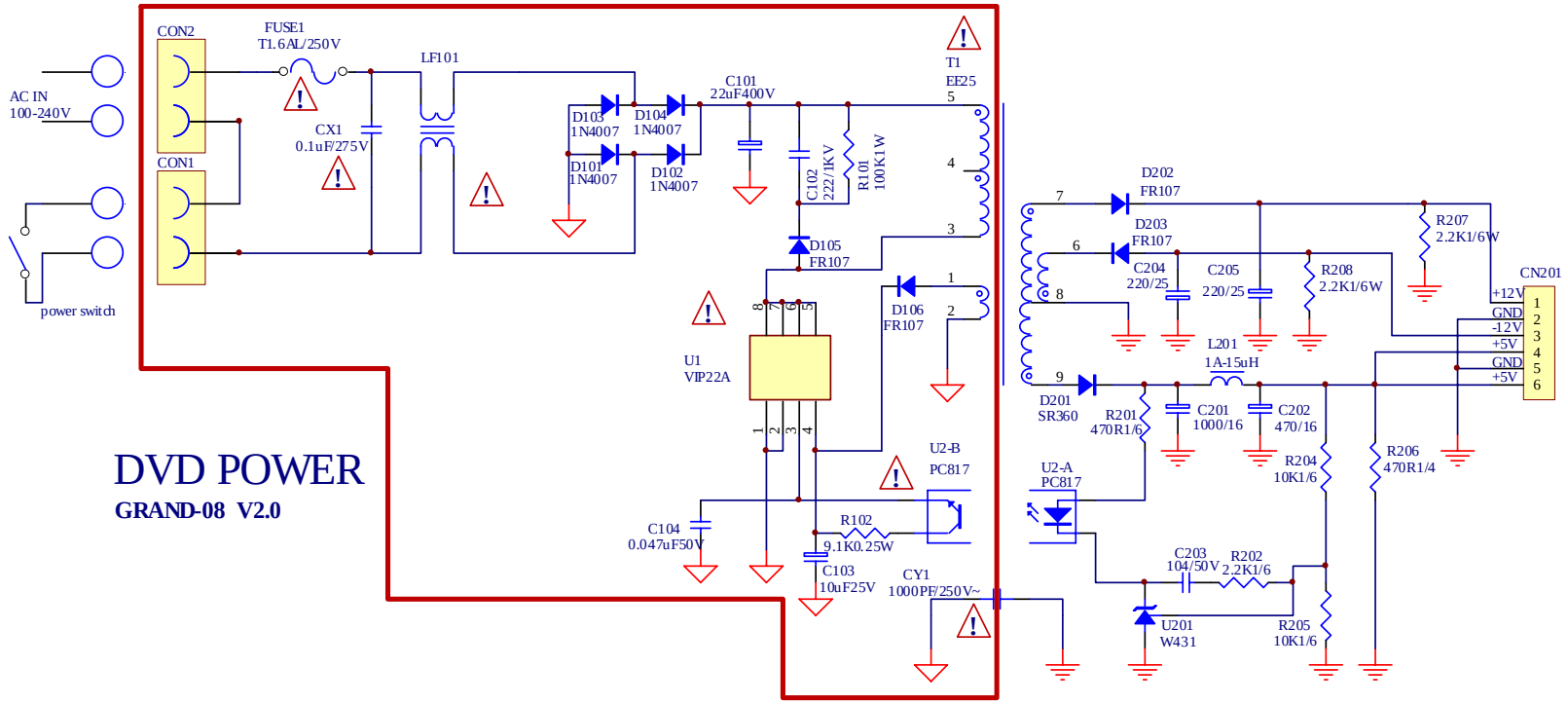

DVD POWER

GRAND-08 V2.0

Title		
Size A4	Number **DVD-19.SCH**	Revision **VER1.2**
Date: 19-Sep-2007	Sheet of	
File: J:\DVD资料\PCB资料\SCH\GRAND-19.DDB	Drawn By:	

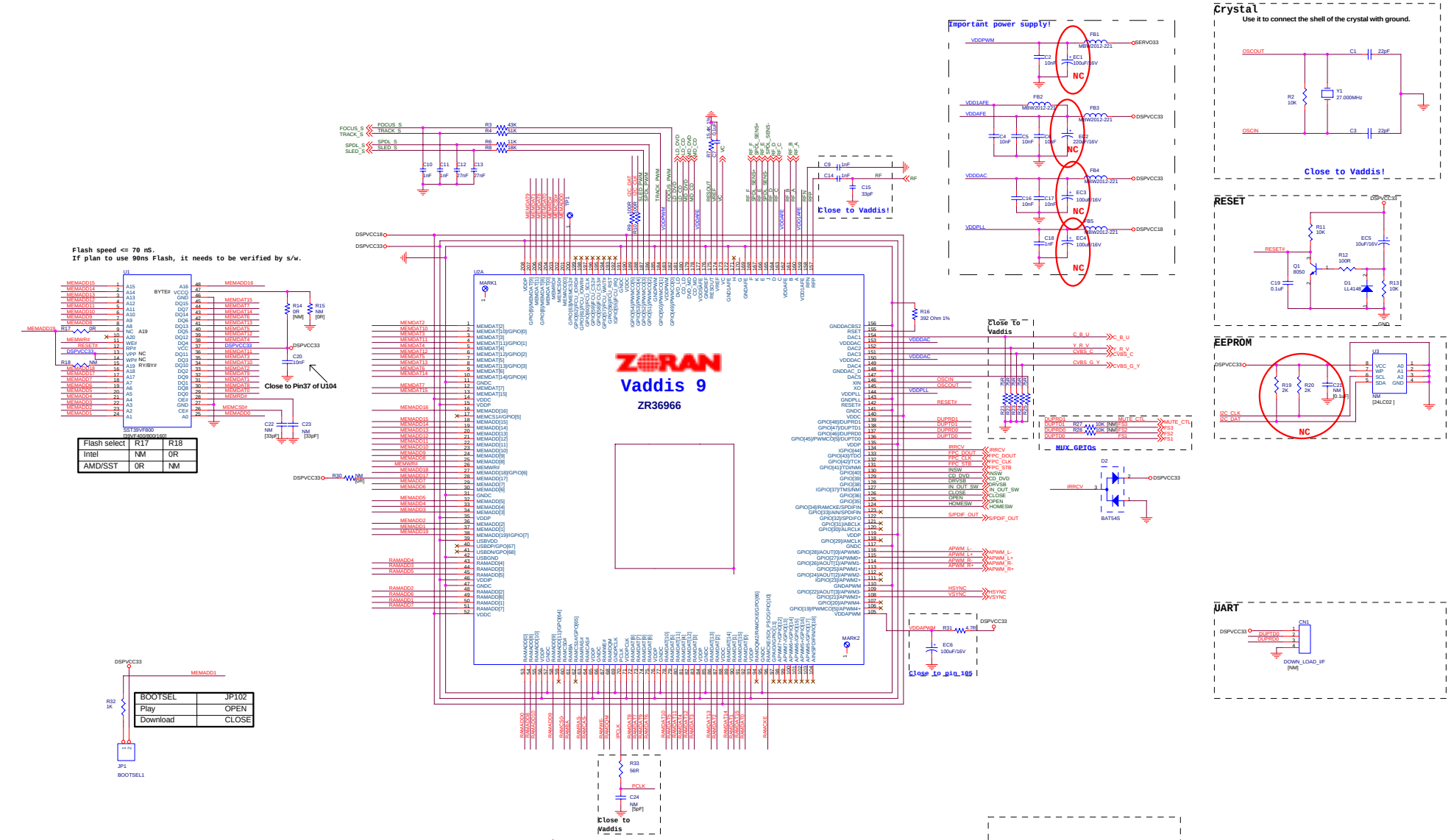

Flash select	R17	R18
Intel	NM	0R
AMD/SST	0R	NM

BOOTSEL	JP102
Play	OPEN
Download	CLOSE