# LT3709S

# *Service Manual*

## TABLE OF CONTENTS


1. Precautions and Safety Notices ····· 4
2. Specification ····· 5
3. Front Panel Function Control Description ····· 10
4. Adjusting Procedure ····· 16
5. Trouble Shooting Flow Chart ····· 19
6. Exploded Diagram and Spare Parts List ····· 22
7. Block and Schematic Diagrams ·····25
8. PCB Layout Diagrams ·····44

# 1. Precautions and Safety Notices

Prior to using this service manual,please ensure that you have carefully followed all the procedures outlined in the user's manual for this product.

**(1)** Read all of these instructions.

**(2)** Save these instructions.

**(3)** Follow all warnings and instructions a marked on the product.

**(4)** Unplug this product from the wall outlet before cleaning.Do not use liquid cleaners or aerosol cleaners, use a damp cloth for cleaning.

**(5)** Do not use this product near water.

**(6)** Do not place this product on an unstable cart,stand or tablle.The product may fall,causing serious damage to the product.

**(7)** Do not tear up the EMI label, if the label has been destroyed,that must to past same size label on the same position.

**(8)** Slots and openings in the cabinet and the back or bottom are provided for ventilation,to ensure reliable operation of the product and to protect it from overheating,those openings must not be blocked or covered.The openings should never be blocked by placing the product on a bed,sofa, rug, or other similar surface.This product should not be placed in a built-in installation less proper ventilation is provided.

**(9)** This products should be operated from the type of power source indicated on the marketin label. If you are not sure of the type of power available, consult your dealer or local power company

**(10)** This product is equipped with a 3-wire grounding type plug,a plug having a third (grounding) pin. This plug will only fit into a grounding-type power outlet. This is a safety feature, if you are unable to insert the plug into the outlet, contact your electrician to replace your obsolete outlet. Do not defeat the purpose of the grounding-type plug.

**(11)** Pay attention to the code which connects with apheliotropism board of inside panel.and don't hook it.

**(12)** Do not allow anything to rest on the power cord.Do not locate this product where persons will walk on the cord.

**(13)** If an extension cord is used with this product,make sure that the total of the ampere ratings on the product plugged into the extension cord to the waplugged into outlet does not exceed 15 ampere.

**(14)** Never push objects of any kind into this product through cabinet slots as they may touch dangerous voltage points or short out parts that could result in a risk of fire or electric shock.Never spill liquid of any kind on the product.

**(15)** Do not attempt to service this product yourself,as opening or removing covers may expose you to dangerous voltage points or other risks.Refer all servicing to service personnel.

**(16)** Unplug this product from the wall outlet and refer servicing to qualified service personnel under the following conditions :

- **a.** When the power cord or plug is damaged or frayed.
- **b.** If liquid has been spilled into the product.
- **c.** If the product has been exposed to rain or water.
- **d.** If the product does not operate normally,when the operating instructions are followed.Adjust only those controls that are covered by the operating instructions since improper adjustment of other controls may result in damage and will often require extension work by a qualified technician to restore the product to normal operation.
- **e.** If the product has been dropped or the cabinet has been damaged.
- **f.** If the product exhibits a distinct change in performance,indicating a need for service.

## 2. Specification

JL321 panel specification:

| Item | Specifications |
|---|---|
| Display pixels | 1366 (H) x 768 (V) pixels ( 1 pixel = 1 RGB cells ) |
| Display Area | 714.96mm (H) x 404.6mm (V) |
| Pixel Pitch | 0.1730mm (H) x 0.5190mm (V) |
| Display Colors | 16.77M |
| Pixel Arrangement | R+G+B vertical stripe |
| Brightness | 550cd/$m^2$ typical |
| Contrast Ratio | 1200:1 typical at CR ≧ 10 |
| Viewing Angle | 176 (H)/ 176(V) Typical |
| Color Chromaticity (CIE) | White: x = 0.285 , y = 0.293 |
| Frame Rate | 50/60Hz |
| Response Time | 6.5ms typical |
| Surface Treatment | Anti-Glare coating(Haze 25%),Hard coating(3H)<br>Anti-reflective coating＜2% reflecting |

JL371 panel specification:

| Item | Specifications |
|---|---|
| Panel Name | AUO |
| Panel Model No. | T370XW01 |
| Display pixels | 1366 (H) x 768 (V) pixels ( 1 pixel = 1 RGB cells ) |
| Display Area | 819.36mm (H) x 460.89mm (V) |
| Pixel Pitch | 0.6mm |
| Display Colors | 16.7M |
| Pixel Arrangement | R+G+B vertical stripe |
| Brightness | 500cd/$m^2$ typical |
| Contrast Ratio | 1000:1 typical at CR ≧ 10 |
| Viewing Angle | 176 (H)/ 176(V) Typical |
| Color Chromaticity (CIE) | White: X = 0.280 ± 3% , Y = 0.290 ± 3% |
| Response Time | 8ms (Gray to Gray) |
| Surface Treatment | Hard-Coating (3H), Anti-Glare, Reflectance < 2% |

JL401 panel specification:

| Item | Specifications |
|---|---|
| Panel Name | Samsung |

| | |
|---|---|
| Panel Model No. | LTA400W2-L01 |
| Display pixels | 1366 (H) x 768 (V) pixels ( 1 pixel = 1 RGB cells ) |
| Display Area | 885.168mm (H) x 497.664mm (V) |
| Pixel Pitch | 0.648 (H) x 0.216 (W) |
| Display Colors | 16.7M |
| Pixel Arrangement | R+G+B vertical stripe |
| Brightness | 500cd/m$^2$ typical |
| Contrast Ratio | 800:1 typical at CR ≧ 10 |
| Viewing Angle | ±85° (H), ±85°(V) Typical |
| Color Chromaticity (CIE) | White: X = 0.280 , Y = 0.290 typical |
| Response Time | 10ms |
| Surface Treatment | Hard-Coating (3H) |

**INPUT Source :**

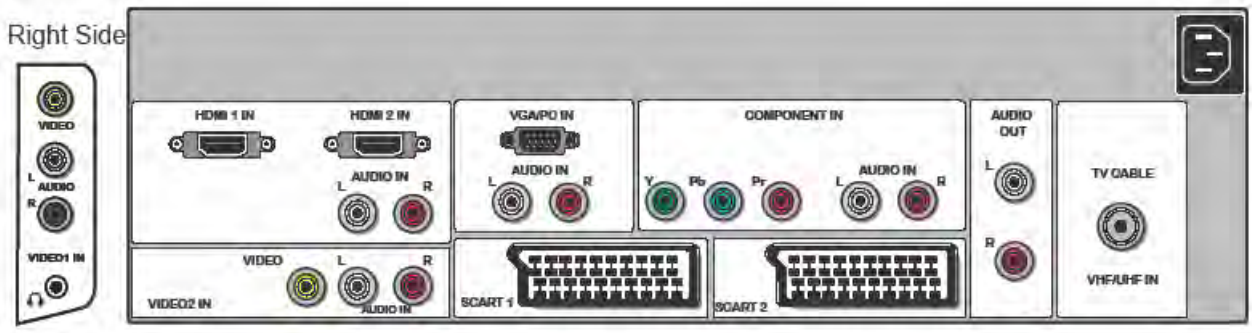


| Inputs & Outputs | Signals | Video Format | Connector types | |
|---|---|---|---|---|
| | | | | |
| TV | Analog TV | PAL | IEC Type | TV |
| VIDEO1 | Video + L/R Audio + Earphone Out | CVBS | RCA | |
| VIDEO2 | Video + L/R Audio | CVBS | RCA | |
| SCART1 | Audio L/R in/out, CVBS in/out, S-Video, RGB | Scart 21Pin | VIDEO3 (Scart1) | SCART1 |
| SCART2 | Audio L/R in/out, CVBS in, S-Video, RGB | Scart 21Pin | VIDEO4 (Scart2) | SCART2 |
| YPbPr | Component (Y, Pb/Cb, Pr/Cr) + L/R Audio | 480i, 480p, 720p, 1080i | RCA | YPbPr |
| HDMI1 | HDMI | Digital RGB +Digital Audio | HDMI 19 Pin | HDMI1 |

| | | | | |
|---|---|---|---|---|
| HDMI2 | HDMI | Digital RGB +Digital Audio | HDMI 19 Pin | HDMI2 |
| VGA | VGA+ L/R Earphone | Analog RGB | D-SUB 15 Pin | VGA |
| AUDIO OUT | L/R Audio | | RCA | STEREO |
| AC IN | AC Power IN | AC 100~240V | YC14 | AC IN |

Note:

A. SCART connector

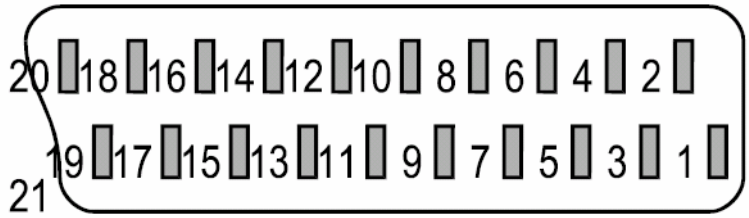


| Pin Number | Pin Name | Signal Level | Impedance |
|---|---|---|---|
| 1 | Audio Output, Right | 0.5V RMS | <1 kΩ |
| 2 | Audio Input, Right | 0.5V RMS | <1 kΩ |
| 3 | Audio Output, Left | 0.5V RMS | <1 kΩ |
| 4 | Ground, Audio | - | - |
| 5 | Ground, Blue | - | - |
| 6 | Audio Input, Left | 0.5V RMS | <1 kΩ |
| 7 | Blue Input | 0.7V | 75 Ω |
| 8 | Function Select (A/V Control) | High (9.5-12V) – A/V Mode, Mid (5-8V) – Wide-screen, Low (0-2V) – TV Mode | >10 kΩ |
| 9 | Ground, Green | - | - |
| 10 | Comms Data 2 | - | - |
| 11 | Green Input | 0.7V | 75 Ω |
| 12 | Comms Data 1 | - | - |
| 13 | Ground, Red | - | - |
| 14 | Ground, blanking | - | - |
| 15 | Red Input | 0.7V | 75 Ω |
| 16 | RGB switching Control | High (1-3V) – RGB, Low (0-0.4) – Composite | 75 Ω |
| 17 | Ground, Video input & output | - | - |
| 18 | Ground, RGB Switching control | - | - |
| 19 | Video Output, composite | 1V including sync | 75 Ω |
| 20 | Video Input, composite | 1V including sync | 75 Ω |
| 21 | Common Ground, shield | - | - |

B. HMDI connector is a type A receptacle for video/audio mode.

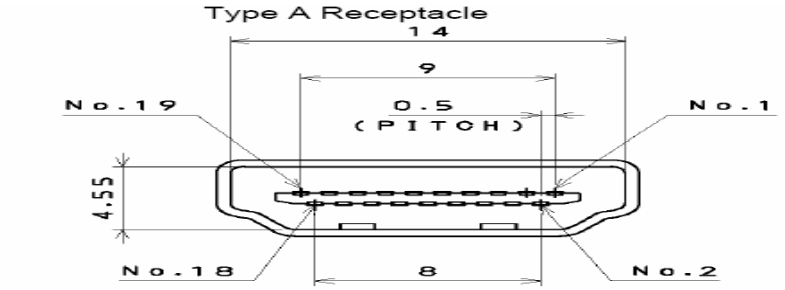


| | | |
|---|---|---|
| **1.** TMDS Data 2+ | **9.** TMDS Data 0- | **17.** CEC/GND |
| **2.** TMDS Data 2 shield | **10.** Clock + | **18.** +5V Power |
| **3.** TMDS Data 2- | **11.** Clock shield | **19.** Hot Plug Detect |
| **4.** TMDS Data 1+ | **12.** Clock - | |
| **5.** TMDS Data 1 shield | **13.** CEC | |
| **6.** TMDS Data 1- | **14.** NC | |
| **7.** TMDS Data 0+ | **15.** DDC CLK | |
| **8.** TMDS Data 0 shield | **16.** DDC DATA | |

C. D-Sub Connector IN. (This function also can provides to HDTV.)

| D-Sub type Connector pin assignment | | |
|---|---|---|
| 1. Red Video | 6. Red Ground | 11. GND |
| 2. Green Video | 7. Green Ground | 12. SDA For DDC1/2B |
| 3. Blue Video | 8. Blue Ground | 13. H-sync. |
| 4. GND | 9. +5V from PC | 14. V-sync. |
| 5. Vdd from PC for DDC | 10. Sync. GND | 15. SCL For DDC1/2B |

D. RCA jacks are all female type.

E. Mini DIN CNC 4 Pins (SCN570S3NS00000) for S-video, the pin assignment is described as below:

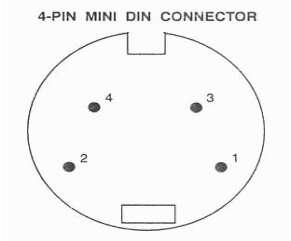


1: Ground
2: Ground
3: Y
4: C

| HDMI | |
|---|---|
| Format | DVI 1.0 |
| Level/Impedance | 0.5~3.0Vp-p/100 Ohm (Differential),50 Ohm (Single ending) |
| TMDS Mode | Single Link |
| Frequency | Fh = 31~80 kHz<br>Fv = 56~76 Hz |
| Maximum Pixel Clock | 135 MHz |
| DDC 1/2B | Compliant with Revision 1.0 |

| | |
|---|---|
| Connector | HDMI x 1 |
| **Analog HD15 PC Signal (RGB)** | |
| Format | R, G, B Analog |
| Level/Impedance | 0.7Vp-p / 75Ω |
| DDC 1/2B | Compliant with Revision 1.0 |
| Sync | H/V separate<br>3V TTL level / 1kΩ |
| Frequency | Fh = 31~80 kHz<br>Fv = 50~75 Hz |
| Maximum Pixel Clock | 135 Mhz |
| Connector | Mini D-Sub 15 pin (female) x 1 |
| **Video (Composite) CVBS Signal** | |
| Format | NTSC, 4.43NTSC, PAL_M, PAL(B,G,H,D,N), SECAM |
| Level / Impedance | 1.0Vp-p / 75Ω |
| **S-Video (Y/C) Signal** | |
| Format | Y, C |
| Level / Impedance | Y: 1.0Vp-p / 75Ω<br>C: ± 286 mV/ 75Ω |
| **Analog HD15 Video Signal (YPbPr/YCbCr)** | |
| Format | Y, Pb, Pr or Y, Cb, Cr |
| Level / Impedance | Y: 1.0Vp-p / 75Ω<br>Pb/Cb, Pr/Cr: 0.7 ± 0.035Vp-p / 75Ω |

**HDMI Timing**

| STANDARD | RESOLUTION | V FREQ Hz | H FREQ kHz | CLK MHz |
|---|---|---|---|---|
| ATSC, 480i | 720x480 | 60 | 15.7 | 27 |
| ATSC, 480p | 720x480 | 60 | 31.5 | 27 |
| ATSC, 1080i | 1920x1080 | 60 | 33.7 | 74.2 |
| ATSC, 720p | 1280x720 | 60 | 45.0 | 74.2 |
| ATSC, 576i | 720x576 | 50 | 15.6 | 27 |

**RGB PC Timing**

| STANDARD | RESOLUTION | V FREQ Hz | H FREQ kHz | CLK MHz |
|---|---|---|---|---|
| VGA | 640x480 | 60 | 31.47 | 25.16 |
| VGA | 640x480 | 75 | 37.5 | 31.5 |
| SVGA | 800x600 | 60 | 37.88 | 40 |
| SVGA | 800x600 | 75 | 46.9 | 49.5 |
| XGA | 1024x768 | 60 | 48.36 | 65.0 |
| XGA | 1024x768 | 75 | 60.02 | 78.75 |
| SXGA | 1280x1024 | 60 | 64 | 108 |
| SXGA | 1280x1024 | 75 | 80 | 135 |
| MAC | 640x480 | 67 | 35 | 30.24 |
| Non-VESA | 720x400 | 70 | 31.5 | 28 |

| Video & S-Video AV Timing | | | | |
|---|---|---|---|---|
| **STANDARD** | **RESOLUTION** | **V FREQ Hz** | **H FREQ kHz** | **CLK MHz** |
| NTSC | 525 | 60 | 15.734 | 12.65 |
| PAL(B,G,H,D,I) | 625 | 50 | 15.625 | 14.50 |
| SECAM | 625 | 50 | 15.625 | 14.50 |
| 4.43NTSC | 525 | 60 | 15.734 | 12.65 |
| PAL-M | 525 | 60 | 15.734 | 12.65 |
| PAL-N | 625 | 50 | 15.625 | 14.50 |
| **HDTV/Component AV Timing** | | | | |
| SDTV 525i | 720x525 | 60 | 15.735 | 27 |
| SDTV 625i | 720x625 | 50 | 15.625 | 27 |
| SDTV 480p | 720x480 | 60 | 31.5 | 27 |
| HDTV 720p | 1280x720 | 60 | 50.0 | 74.2 |
| HDTV 1080i | 1920x1080 | 60 | 33.7 | 74.2 |
| Power Source | AC100 – 240 V, 60/50 Hz | | | |
| Sound Output | 10W X2, 8 Ohm. | | | |

Signal Connector Pin Assignment

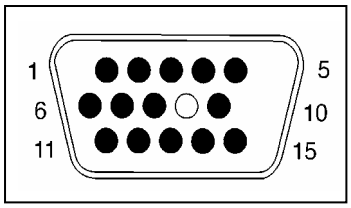


| Pin | Assignment | Pin | Assignment | Pin | Assignmen |
|---|---|---|---|---|---|
| 1. | Red | 6. | Red Ground | 11. | Ground |
| 2. | Green | 7. | Green Gro und | 12. | SDA |
| 3. | Blue | 8. | Blue Ground | 13. | Horizontal Sy |
| 4. | Ground | 9. | Not Connected | 14. | Vertical Sync. |
| 5. | Self Test | 10. | Sync. Ground | 15. | SCL |

# 3. Front Panel Function Control Description

## Operation, Adjust and Programming

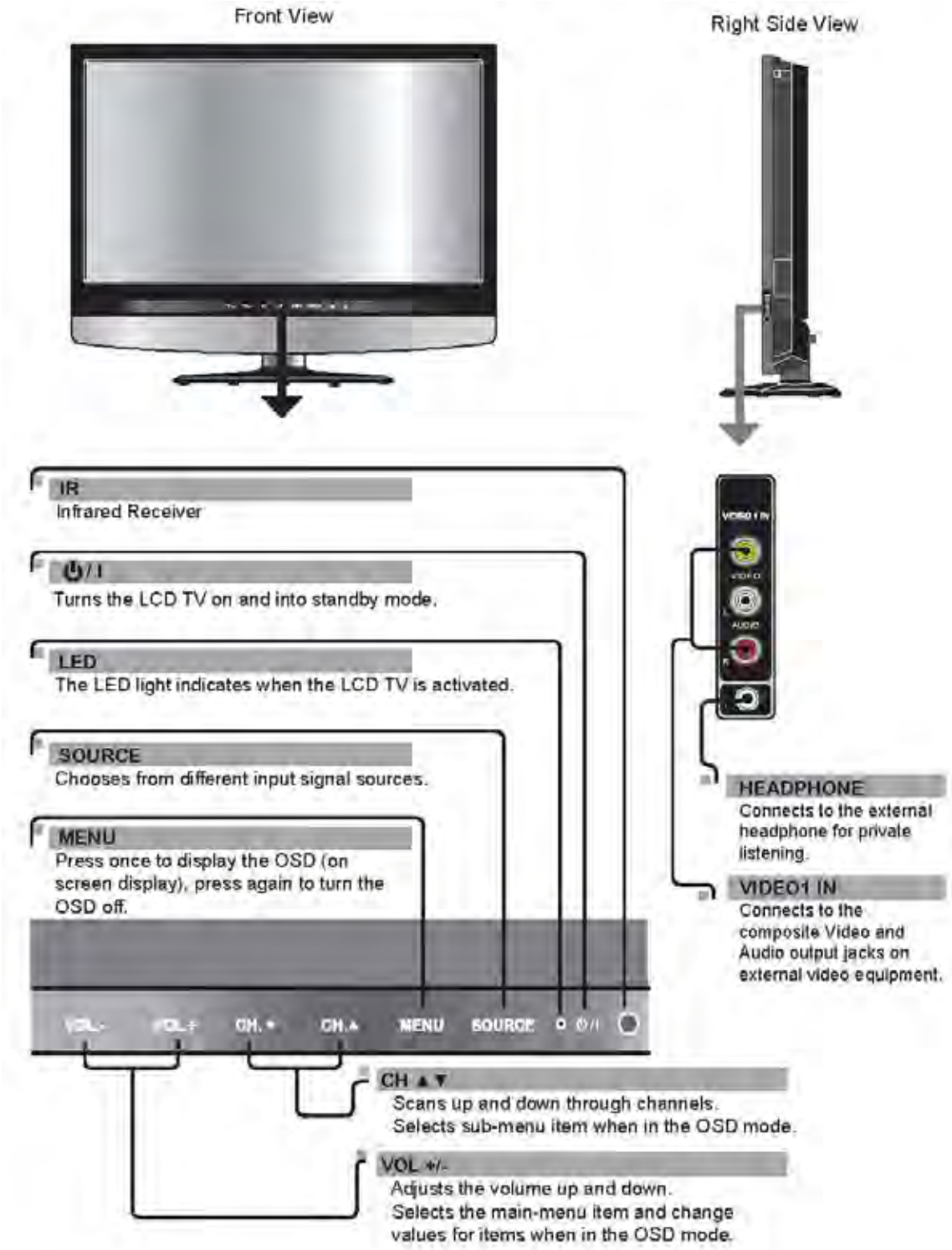

**VIDEO2 IN**
Connects to the composite VIDEO and AUDIO(L/R) output jacks on external video equipment.

**HDMI 1/HDMI 2 IN**
Connects the all digital AV equipment with HDMI connector.HDMI supports enhanced, high-definition video and two-channel digital audio. The AUDIO(L/R) of HDMI IN is for DVI connection.

**VGA IN**
Connects the PC, or other AV equipment with VGA and AUDIO(L/R) output jacks.

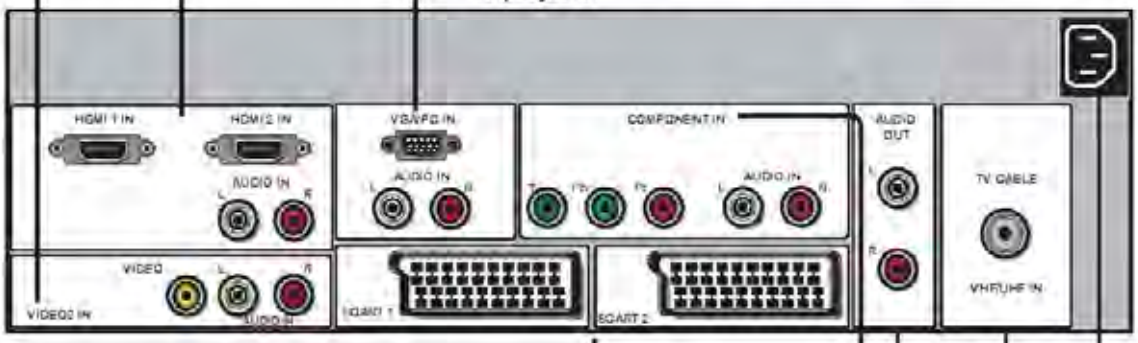


**SCART1/SCART2 IN**
Connects a piece of AV equipment with a SCART socket.
The SCART interface offers multiple signals(RGB, AV) with audio input/output between the TV and external video equipment.

**COMPONMENT IN**
Connects to the DVD player, Digital Set-Top-Box, or other AV equipment with component(YPbPr) video and audio output jacks.

**AUDIO OUT**
Connects to the AUDIO(L/R) input jacks on AV equipment.

**TV CABLE**
Connects RF input from VHF/UHF antenna or cable.

**AC IN**
Connects to the AC power cord.

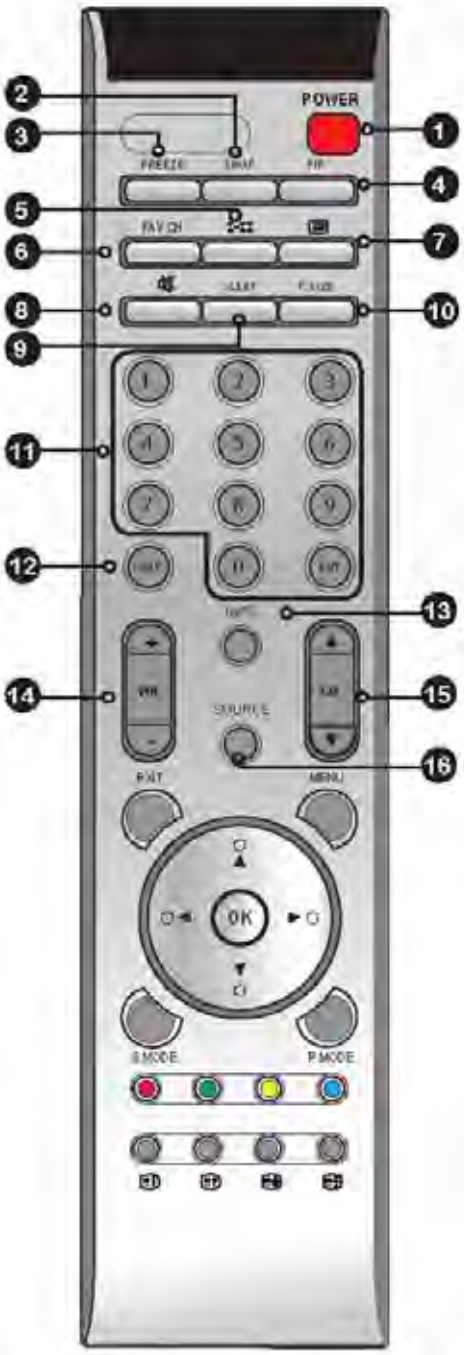


| | | |
|---|---|---|
| 1 | POWER | Turns the LCD TV on and off. |
| 2 | SWAP | Swaps between the main and sub window in PIP/POP mode. |
| 3 | FREEZE | Pressing **FREEZE** to freeze the current picture, press again to restore the picture. |
| 4 | PIP | Turns PIP/POP on and off. |
| 5 | I-II | Cycles through the TV sound options (NICAM) : MONO/DUAL/STEREO |
| 6 | FAV.CH | Pressing **FAV.CH** displays favorite channels. |
| 7 | | Turns on and off the Teletext function. |
| 8 | | Mutes and restores the audio |
| 9 | SLEEP | Cycles through the LCD TV sleep timer: OFF/30/60/90/120 mins |
| 10 | P.SIZE | Cycles through Widescreen mode settings :NORMAL /FULL/WIDE/ZOOM/ AUTO |
| 11 | 0-9/ENT | Pressing a number selects a channel. Following selection, pressing **ENT** activates the channel, or channel activates automatically in 3 seconds. |
| 12 | JUMP | Returns to previously selected channel. |
| 13 | INFO | Pressing once displays a variety of information such as the current channel and the input source. |
| 14 | VOL.+- | Increases and decreases volume. |
| 15 | CH.▲▼ | Scans up and down the channels. |
| 16 | SOURCE | Pressing **SOURCE** displays the source list, use ▲▼ to select the video equipment connected to the video inputs of your LCD TV : TV/VIDEO1/VIDEO2/ VIDEO3/VIDEO4/VIDEO5/VIDEO6/ VIDEO7/COMPUTER |

"Not all region supports Teletext-please check with your program service provider"

| | | |
|---|---|---|
| 17 | EXIT | Exits the OSD menu. |
| 18 | MENU | Displays the OSD menu on the screen. |
| 19 | ▲▼►◄ OK | Cycles through OSD options and selects individual menu items. OK confirms option settings. |
| 20 | S.MODE | Selects sound effect options: Surround/ Live/Dance/Techno/Classic/Soft/Rock/ Pop/Off. |
| 21 | P.MODE | Selects picture mode: Vivid/High-Bright/ Cinema/Sport/User |
| 22 | | Accesses the TELETEXT items or corresponding pages. |
| 23 | | Displays the main index in TELETEXT mode. |
| 24 | | Displays the top, bottom or all of page, to easily read in TELETEXT mode. |
| 25 | | Freezes a multi-page passage on screen inTELETEXT mode. |
| 26 | | Reveals hidden information such as the answer to a quiz in TELETEXT mode. |

**Effective range:**
**The remote can control the LCD TV from up to 5m away, if pointed directly at the receiver.**

The operation of each OSD controls is described as following table:

| Menu | Options | Sub-Options | Function and Description |
|---|---|---|---|
| VIDEO | **Picture Mode** | Vivid →Standard →Cinema →Sport→User. | Press repeatedly for different picture modes: Vivid →High-Bright→Cinema→Sport →User. |
| | **Contrast** | 0...100 **(80)** | Fine tune the contrast. |
| | **Brightness** | 0...100 **(50)** | Fine tune the Bright |
| | **Auto Setting (only for VGA)** | **Press OK button** | Press OK button to automatically adjust the display setting to optimize performance based on the VGA mode. |
| | **Phase (only for VGA)** | 0...100 | Control the signal phase to improve focus clarity and image stability based on the VGA mode. |
| | **Saturation** | 0...100 **(70)** | Fine tune the Saturation. |
| | **Hue** | -30...+30 **(0)** | Fine tune the Hue |
| | **Sharpness** | 0...7 **(4)** | Fine tune the Sharpness |
| | **Manual Clock (only for VGA)** | | Control the width of the picture based on the VGA. |
| | **Display Adjustment (only for VGA)** | **H Position** | Adjust the position of the picture left and right in the window. |
| | | **V Position** | Adjust the position of the picture up and down in the window. |
| | **Color Temperature** | Cool | Set the color temperature type. |
| | | **Nature** | |
| | | Warm | |
| | | User | Red/Green/Blue: 0...255 |
| | **Noise Reduction** | **Strong→Middle→ Low→Off** | Strong→Middle→Low→Off |
| AUDIO | **Bass** | 0...100 **(50)** | Fine tune the bass value. |
| | **Treble** | 0...100 **(50)** | Fine tune the treble value. |
| | **Balance** | -50...+50 **(0)** | Fine tune the balance value. |
| | **Sound Effect** | **Surround** | Select the preset effec mode to match your music type and achieve stunning effects. |
| | | Live | |
| | | Dance | |
| | | Techno | |
| | | Classic | |
| | | Soft | |
| | | Rock | |
| | | POP | |
| | | Off | Close this function. |
| SETUP | **Parental** | **Channel Lock** | Press ◄► buttons to select the channel you want to lock. |
| | | **Videl Lock** | Press ◄► buttons to select the input video you want to lock. |
| | | **Change Password** | Press OK button to display the password confirm menu. And use 0-9 keys to enter a new four-digit password, and then confirm the new password by entering it again. |
| | **Language** | English/French/Arabic/Russian/Italian/Portuguese/Turkish/Persian | Set on-the-screen language. |

| | | | |
|---|---|---|---|
| | **Osd Transparent** | Off/**On** | Press Off/On to control the translucence of the OSD on-screen menus' background. |
| | **Default** | Reset to default value. | Reset the items in the setup menu except the protected-items. |
| TV | **Region Selection** | Western Europe, UK | Use "Left/Right" keys to select the region |
| | **Searching** | Auto search channels. | To select and confirm this selection, it will automatically search all recievable channels and put the programs into memory in sequence from low requancy to high frequancy |
| | **Manual Scan** | Searching the channel by Manual | ● Press "OK" to confirm and display a dialog for setting:<br>● Use "Left" and "Right" to select "PR Start"; Note that the PR before PR Start number won't be overwrote.<br>● EX: PR Start 5, PR 1~4 will be kept as usual. |
| | **Update Search** | | ● Use "up" or "down" key to highlight the item.<br>● Use "enter" to Start Update Search.<br>● Press "enter" to end the search and return. |
| | **Program Edit** | Edit the channel name. | ● Use "up" or "down" to select Channel Use "enter" to confirm,and a sub menu below comes up<br>● Use "up" and "down" to select change property,use "enter" to confirm edit it. Select "Store" and push "enter" to exit. |
| | **Favorite** | Edit/Delete/Empty/ New | Press Ok key to display Favorite channel list and press ◄► to operate Edit/Delect/Empty/ New. |

# 4. Adjusting Procedure

| ITEM<br>Program Menu. | | Equipments | Requiremer | Procedure and SPEC |
|---|---|---|---|---|
| 1 | **VIDEO adjustment** | DVD<br>Video Cable | Play DVD<br>Set DVD to interlaced output | Screen is clear and fluent |
| 2 | **S-VIDEO** | DVD<br>S-Video Cable | Play DVD<br>Set DVD to interlaced output | Screen is clear and fluent |
| 3 | **DVD (Y,Cb,Cr) 480i** | DVD<br>Component Cable | Play DVD(Y,Cr,Cb)<br>Play DVD<br>Set DVD to interlaced output | Screen is clear and fluent |
| 4 | **DVD (Y,Pb,Pr) 480p/720p/1080i** | DVD<br>Component Cable<br>720p/1080i<br>DVD Player<br>Samsung HD-931 | Play DVD(Y,Pr,Pb)<br>Set the DVD to progressive output | Screen is clear and fluent |
| 5 | **HDTV (Y,Pb,Pr) 720p/1080i** | HDTV Receiver<br>ATSC HDTV Tuner<br>SAMSUNG<br>SIR-T165<br>BS Tuner:<br>**Panasonic TU-BHD300**<br>Component Cable | Play HDTV<br>(Y,Pr,Pb) | Screen is clear and fluent<br>D-VHS Digital HDTV Video Cassette Recorder<br>JVC HM-DH30000U<br>Panasonic NV-DH2 |
| 6 | **VGA/HDMI** | PC<br>VGA Cable<br>DVI Cable | PC Mode | **1.** Each Mode can display normally。If there is a specific Mode that is not appropriate after switching ，press Auto Adjust can automated adjust to appropriate screen.<br>**2.** Confirm PC can automated identify the model of PDP. |
| 7 | **VGA** | TV BOX<br>VGA Cable | | Utilize external-connected TV BOX, watching the<br>TV program; the screen is clear and fluent. |

| | | | | |
|---|---|---|---|---|
| **8** | **WINDOWS. OVERSCAN (6%)** | DVD<br>S-Video Cable<br>Video Cable | Play DVD test disc<br>VIDEO ESSENTIALS<br>Set DVD to interlaced output | **1.** Select SOURCE then choose VIDEO or SVIDEO.<br>**2.** Sending the signal from DVD test disc (eighth paragraph)<br> 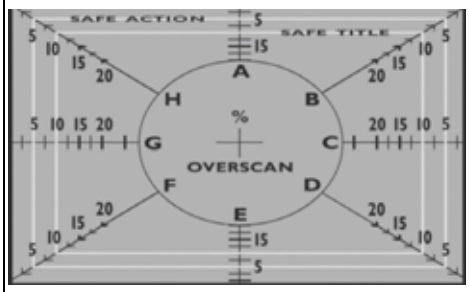 <br><br>**3.** Watch the screen to check if sees the block screen within SAFE ACTION. |
| **9** | **NTSC/PAL switch** | DVD<br>S-Video Cable<br>Video Cable | Play DVD test disc<br>VIDEO ESSENTIALS<br>Set DVD to interlaced output | **1.** Select SOURCE then choose VIDEO or S-VIDEO.<br>**2.** Sending the signal from DVD test disc (sixth paragraph)<br> <br>**3.** Switch DVD to output mode NTSC/PAL, see if there is the action of switch |
| **10** | **480P/480i switch** | DVD<br>Component Cable | Play DVD test disc<br>VIDEO ESSENTIALS<br>Set the DVD to progressive output (P-SCAN) | **1.** Select SOURCE then choose VIDEO or S-VIDEO.<br>**2.** Sending the signal from DVD test disc (sixth paragraph)<br> <br>**3.** Switch DVD output mode P-SCN ON/OFF, see if there is the action of switch mode on the screen.(480i/480p). |

| | | | | |
|---|---|---|---|---|
| **11** | **Audio adjustment** | Pattern Generator<br>Sound input<br>External connect left-right trumpet(10~15W/4Ω) | Any Pattern | **1.** Select SOURCE<br>**2.** Then press MENU KEY enter AUDIO adjustment item. |
| **12** | **a. Volume** | | | **1.** ←,→Key Set the sound volume.<br>**2.** Check if the action is normal. |
| **13** | **b. Treble** | | | **1.** Press←,→Key Set the high pitch volume<br>**2.** Check if the action is normal.<br>**3.** The initial value is ”16” |
| | **c. Bass** | | | **1.** Press←,→Key Set the low pitch volume.<br>**2.** Check if the action is normal.<br>**3.** The initial value is ”16” |
| | **d. Balance** | | | **1.** Press←,→Key Set the balance between left-right trumpet.<br>**2.** Check if the action is normal.<br>**3.** The initial value is located at middle. |
| **14** | **Language adjustment** | | | 1. Select required language.<br>2. Initial value is set to English or set upon clients’ requirement. |

# 5. Trouble Shooting Flow Chart

STEP 1.

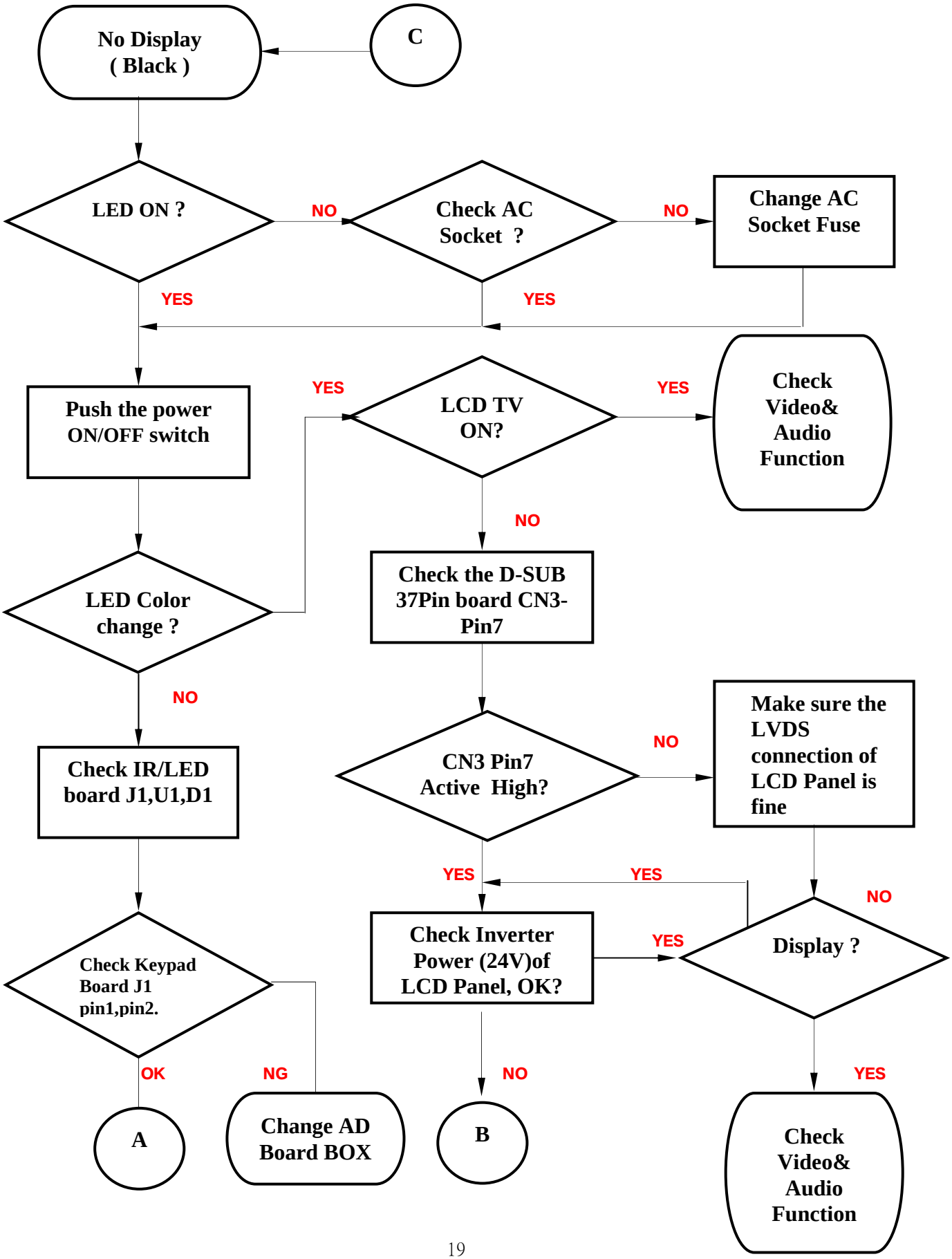

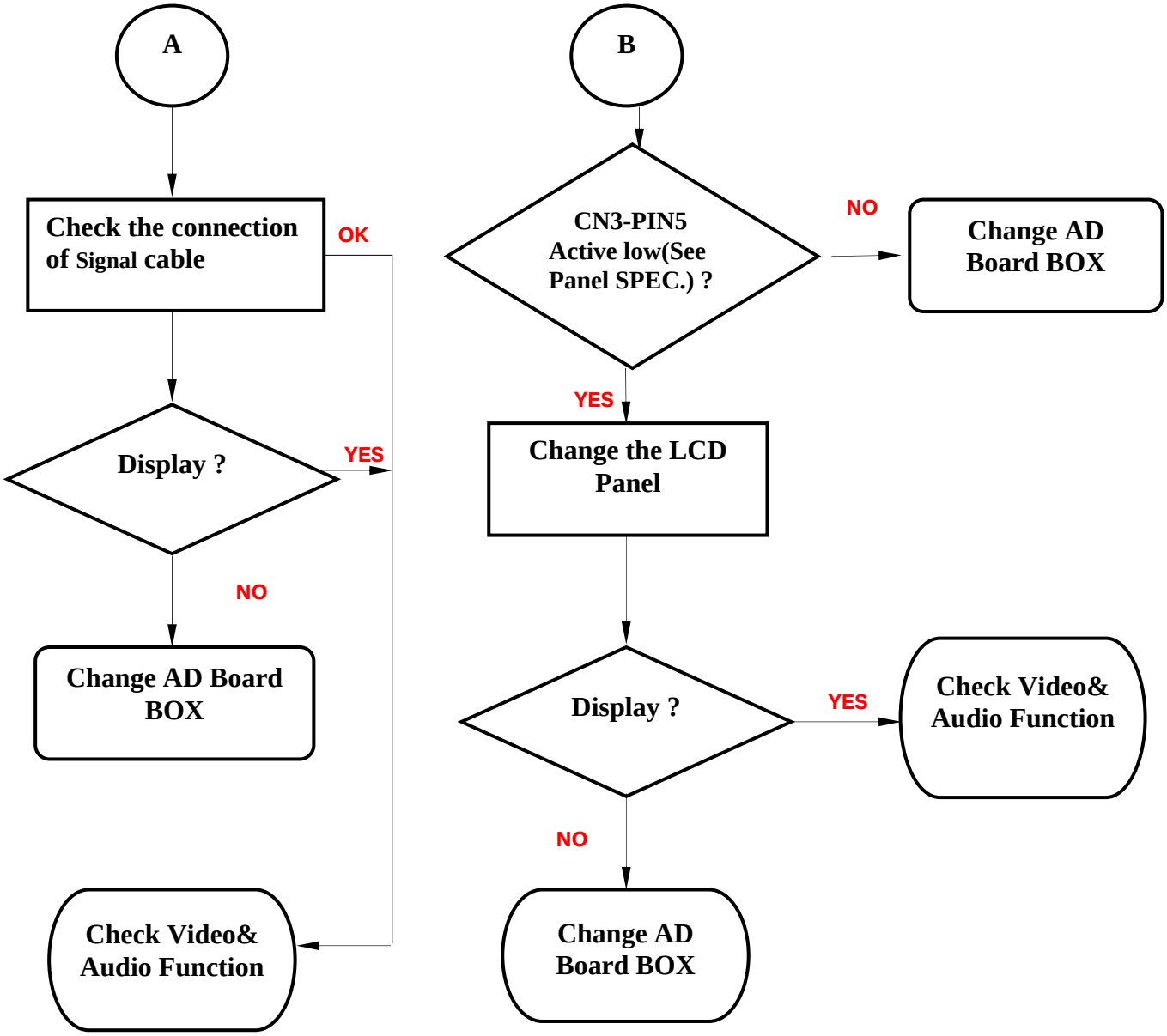
A
Check the connection of Signal cable
OK
Display ?
YES
NO
Change AD Board BOX
Check Video& Audio Function
B
CN3-PIN5 Active low(See Panel SPEC.) ?
NO
Change AD Board BOX
YES
Change the LCD Panel
Display ?
YES
Check Video& Audio Function
NO
Change AD Board BOX

**STEP 2.**

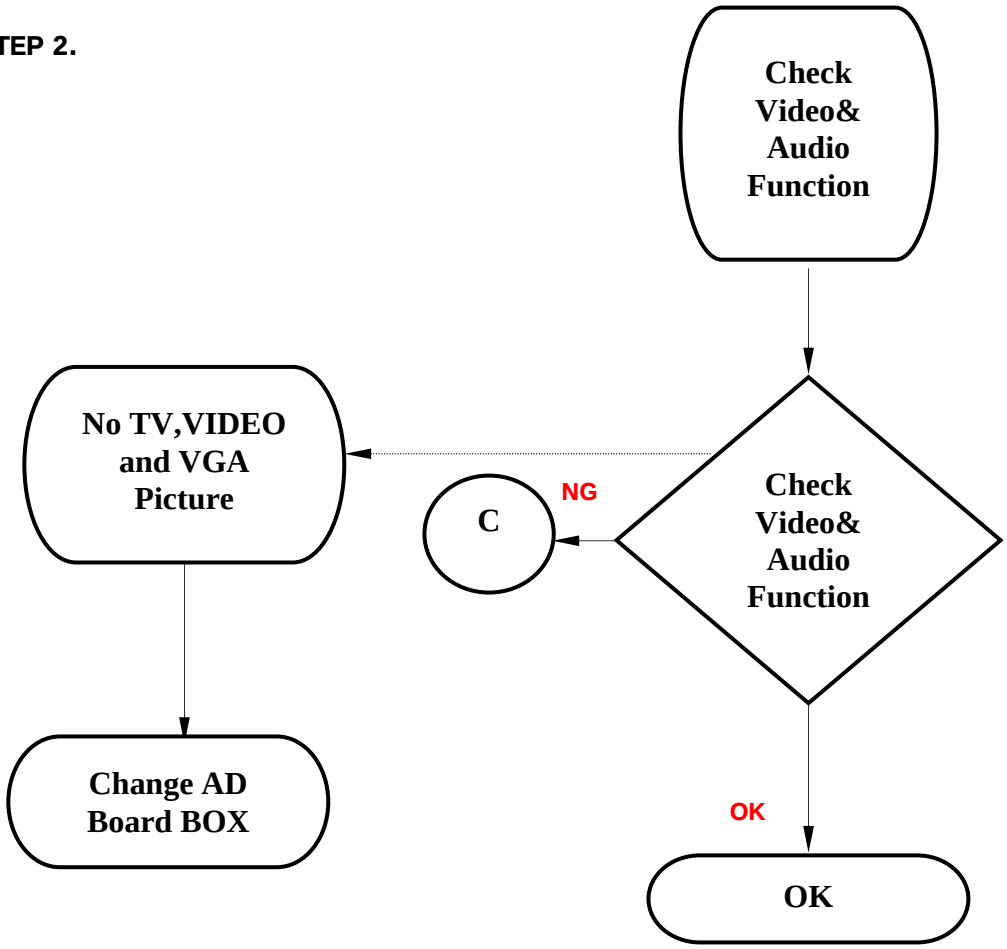
Check Video& Audio Function
Check Video& Audio Function
NG
C
No TV,VIDEO and VGA Picture
Change AD Board BOX
OK
OK

**STEP 3.**

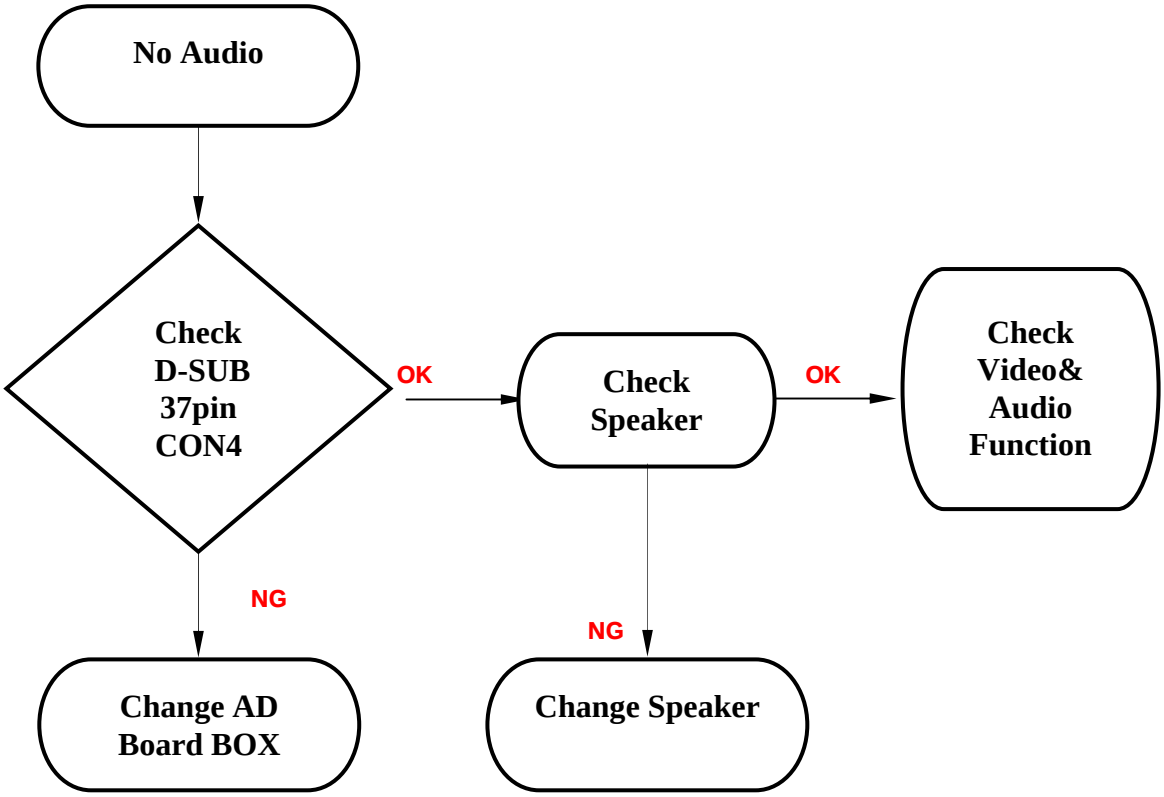
No Audio
Check D-SUB 37pin CON4
OK
Check Speaker
OK
Check Video& Audio Function
NG
NG
Change AD Board BOX
Change Speaker

## 6. Exploded Diagram and Spare Parts List

**JL321**

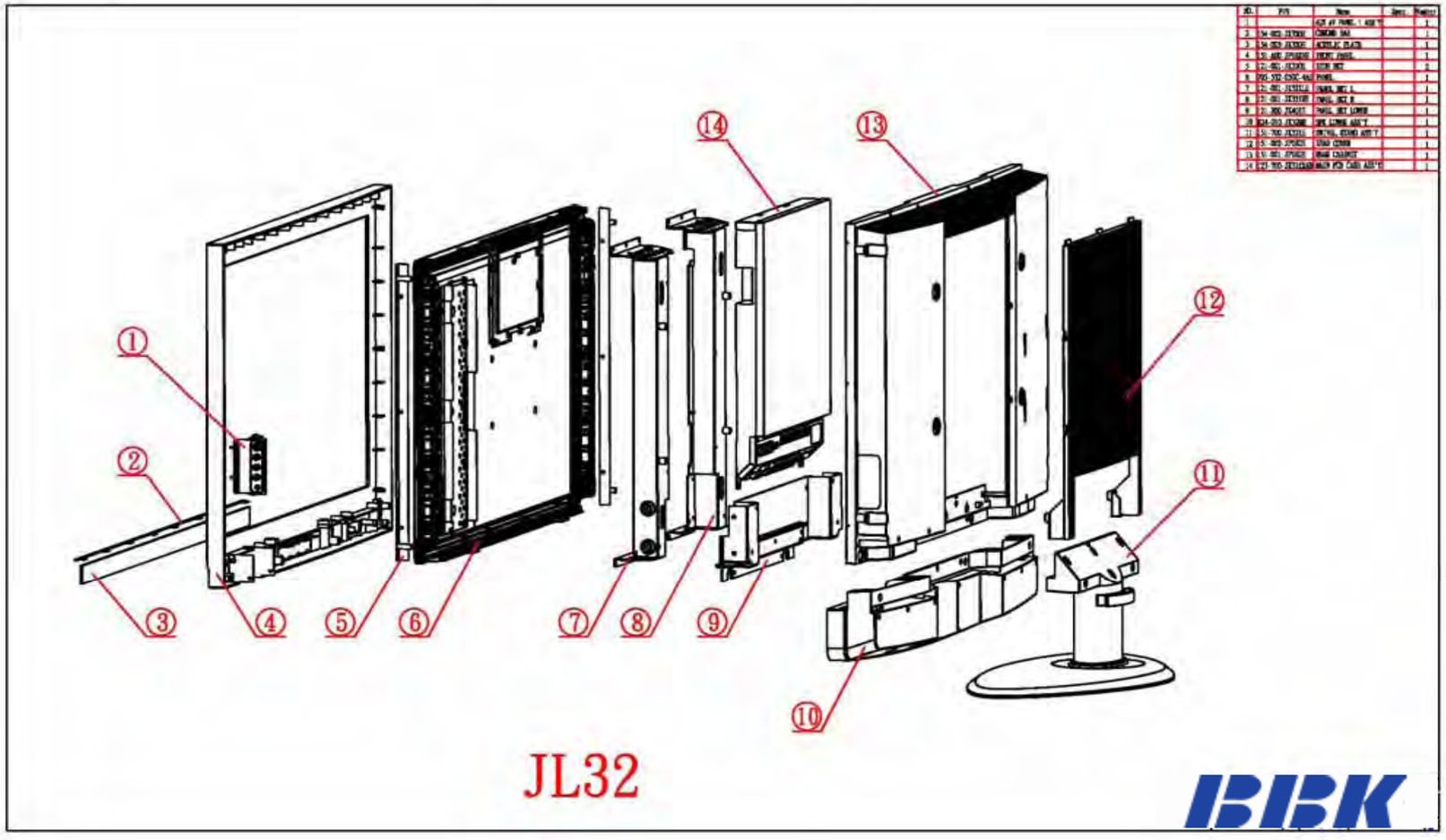

**JL371**

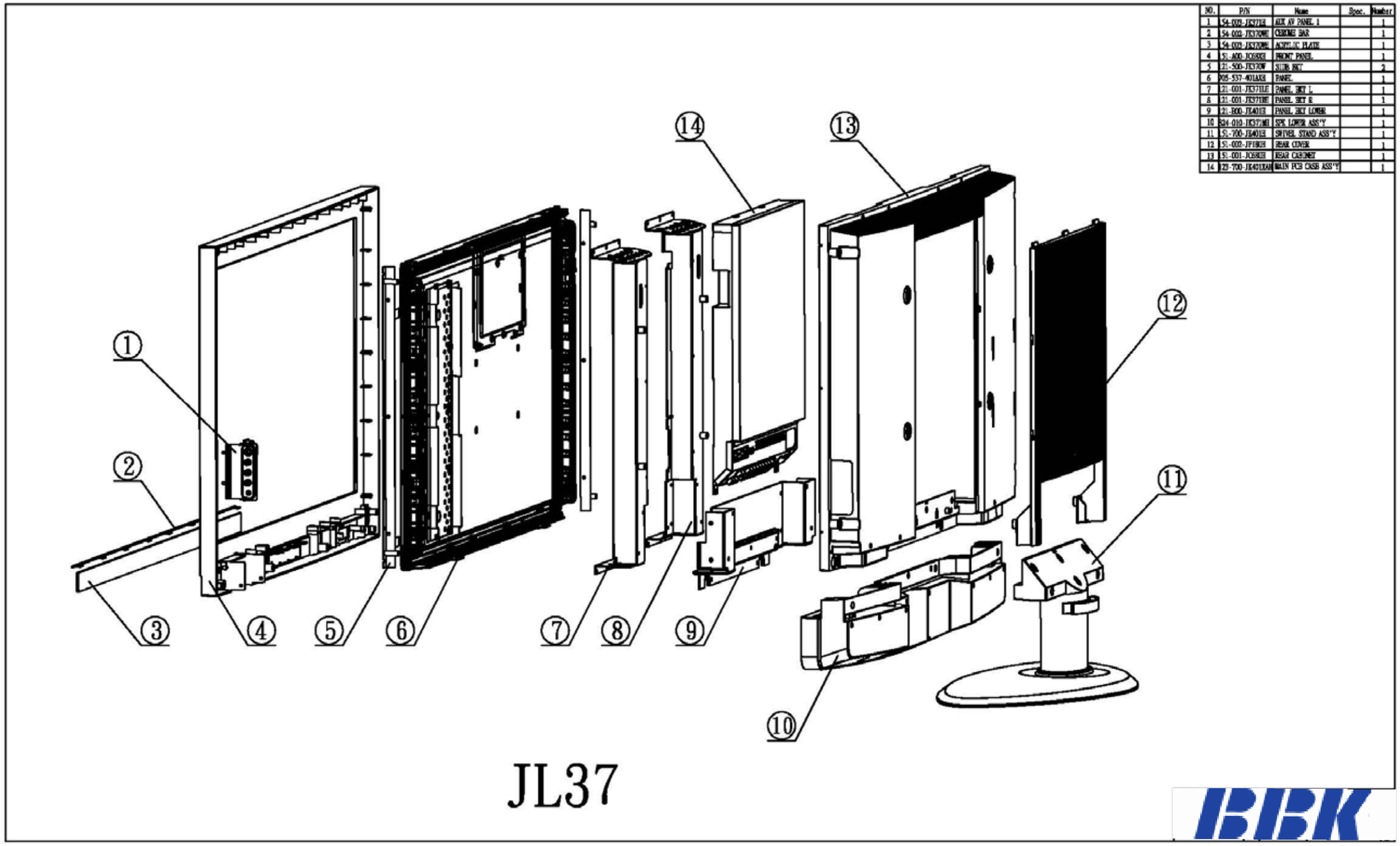


| NO. | P/N | Name | Spec. | Number |
|---|---|---|---|---|
| 1 | 54-005-JK371LE | AUX AV PANEL L | | 1 |
| 2 | 54-002-JK370ME | CHROME BAR | | 1 |
| 3 | 54-003-JK370ME | ACRYLIC PLATE | | 1 |
| 4 | 51-A00-JC68XH | FRONT PANEL | | 1 |
| 5 | 121-500-JK370W | SUB. BKT | | 2 |
| 6 | 905-537-401AXH | PANEL | | 1 |
| 7 | 21-001-JK371LE | PANEL BKT L | | 1 |
| 8 | 21-001-JK371RE | PANEL BKT R | | 1 |
| 9 | 21-B00-JK401E | PANEL BKT LOWER | | 1 |
| 10 | 524-010-JK371ME | SPK LOWER ASS'Y | | 1 |
| 11 | 51-700-JK401LE | SWIVEL STAND ASS'Y | | 1 |
| 12 | 51-002-JP18GH | REAR COVER | | 1 |
| 13 | 51-001-JC68GH | REAR CABINET | | 1 |
| 14 | 929-700-JK401XAH | MAIN PCB CASE ASS'Y | | 1 |

**JL401**

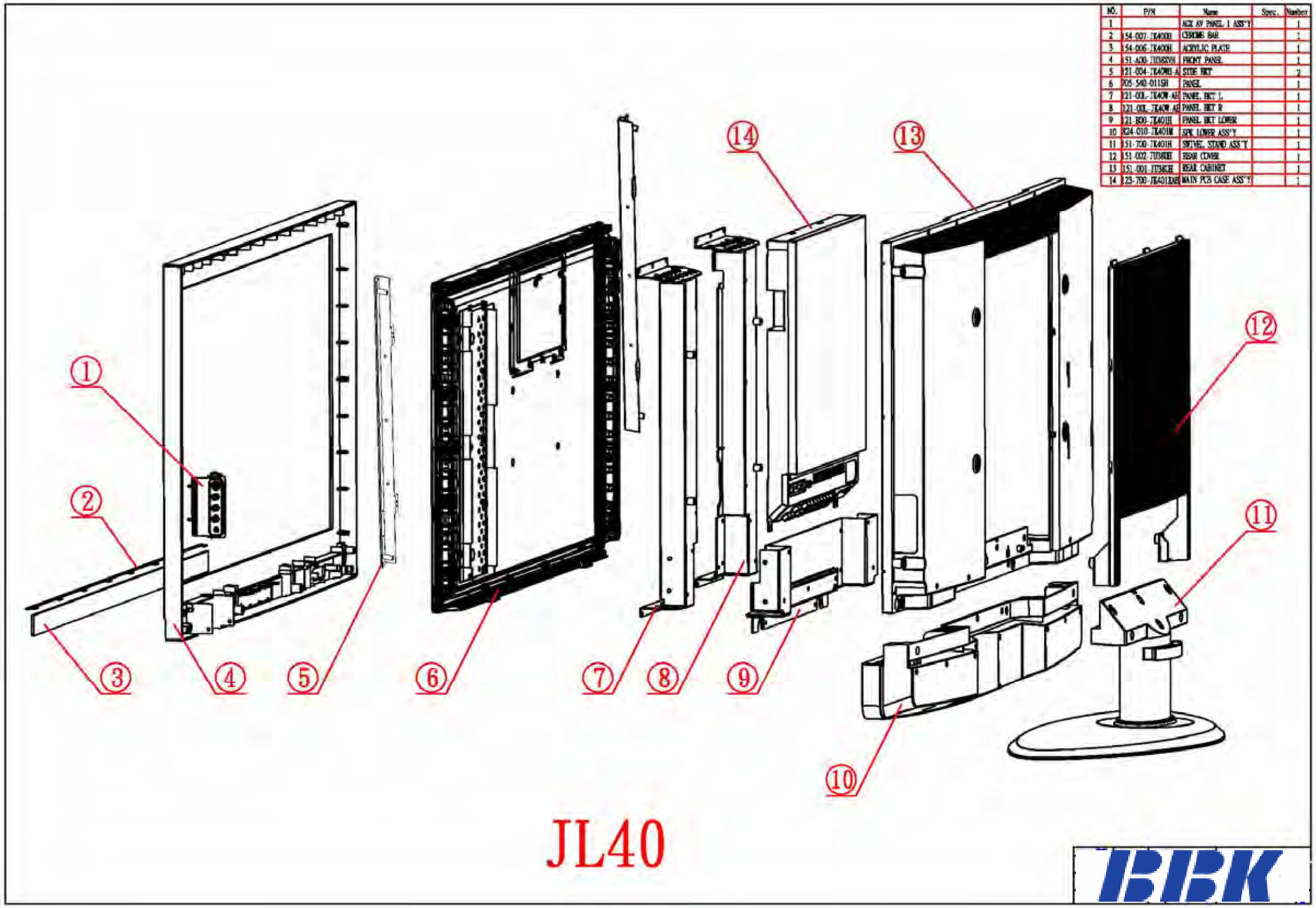


| NO. | P/N | Name | Spec. | Number |
|---|---|---|---|---|
| 1 | | ACE AV PANEL 1 ASS'Y | | 1 |
| 2 | 154-007-JL400H | CHROME BAR | | 1 |
| 3 | 154-006-JL400H | ACRYLIC PLATE | | 1 |
| 4 | 151-A00-JL0HSVM | FRONT PANEL | | 1 |
| 5 | 121-004-JL40WH-A | SIDE BKT | | 2 |
| 6 | P05-540-0111SH | PANEL | | 1 |
| 7 | 121-00L-JL40W-AE | PANEL BKT L | | 1 |
| 8 | 121-00L-JL40W-AE | PANEL BKT R | | 1 |
| 9 | 121-B00-JL401E | PANEL BKT LOWER | | 1 |
| 10 | 524-010-JL401M | SPK LOWER ASS'Y | | 1 |
| 11 | 151-700-JL401H | SWIVEL STAND ASS'Y | | 1 |
| 12 | 151-002-JL0HRH | REAR COVER | | 1 |
| 13 | 151-001-JL0HCH | REAR CABINET | | 1 |
| 14 | 123-700-JL401XAH | MAIN PCB CASE ASS'Y | | 1 |

# 7. Block and Schematic Diagrams

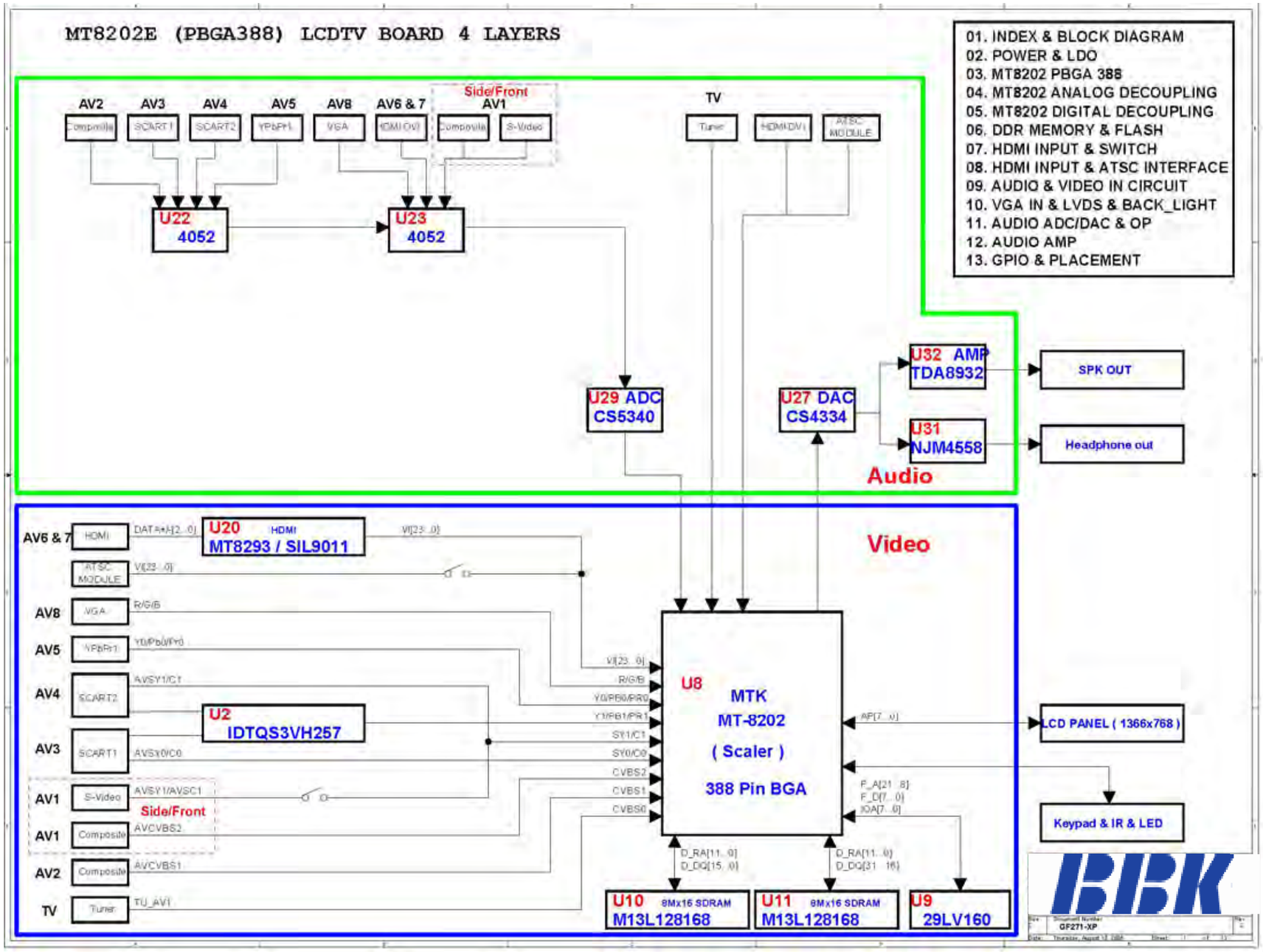

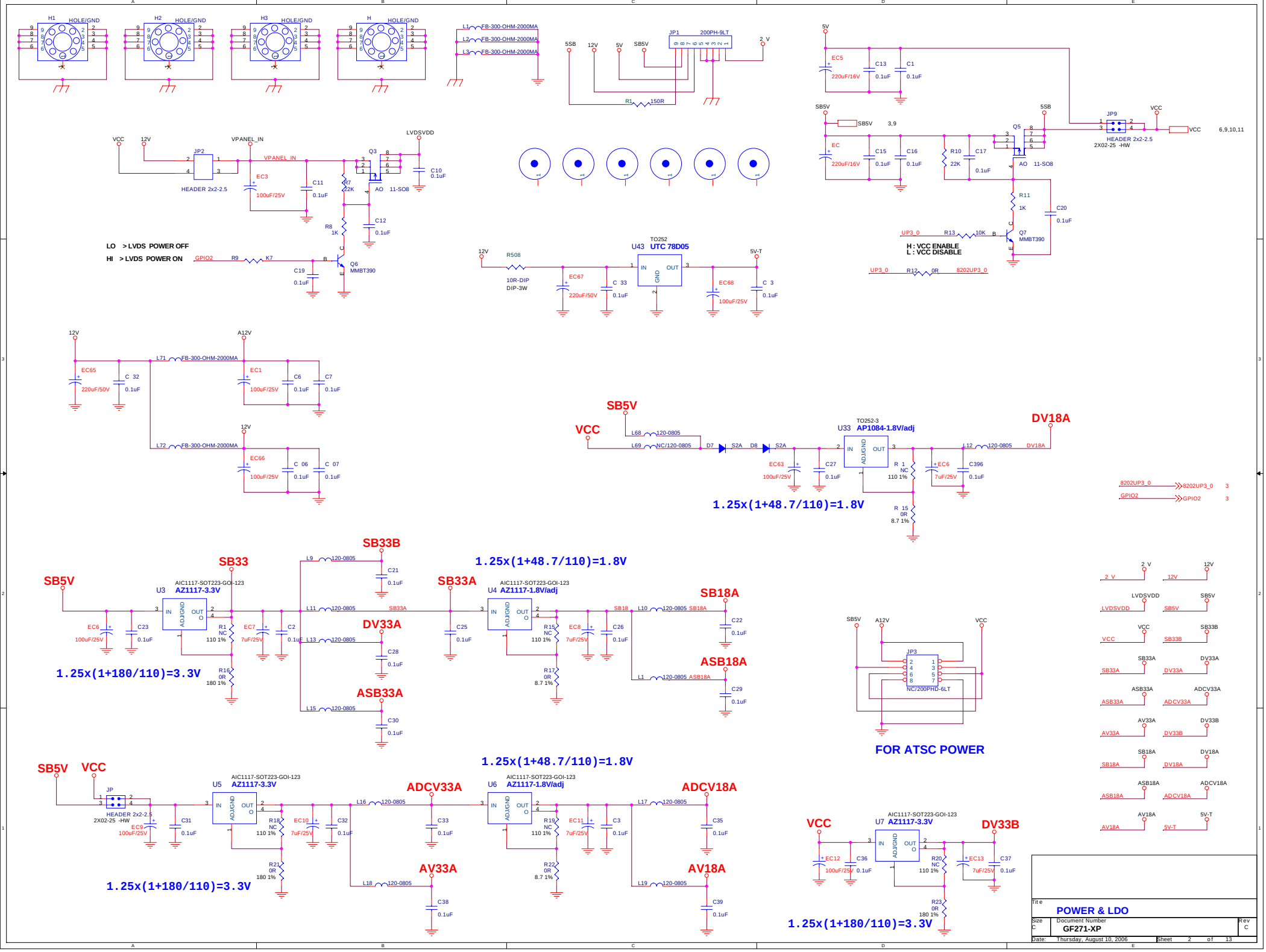
H1 HOLE/GND
H2 HOLE/GND
H3 HOLE/GND
H HOLE/GND
L1 FB-300-OHM-2000MA
L2 FB-300-OHM-2000MA
L3 FB-300-OHM-2000MA
5SB 12V 5V SB5V
JP1 200PH-9LT
2 V
R1 150R
5V
EC5 220uF/16V
C13 0.1uF
C1 0.1uF
SB5V
SB5V 3,9
EC 220uF/16V
C15 0.1uF
C16 0.1uF
R10 22K
C17 0.1uF
Q5 AO 11-SO8
5SB
JP9 HEADER 2x2-2.5 2X02-25 -HW
VCC
VCC 6,9,10,11
R11 1K
C20 0.1uF
UP3_0 R13 10K
Q7 MMBT390
H : VCC ENABLE
L : VCC DISABLE
UP3_0 R12 0R 8202UP3_0
VCC 12V
JP2 HEADER 2x2-2.5
VPANEL_IN
VPANEL_IN
EC3 100uF/25V
C11 0.1uF
Q3 AO 11-SO8
LVDSVDD
C10 0.1uF
R7 22K
C12 0.1uF
R8 1K
LO > LVDS POWER OFF
HI > LVDS POWER ON
GPIO2 R9 K7
Q6 MMBT390
C19 0.1uF
12V R508 10R-DIP DIP-3W
EC67 220uF/50V
C 33 0.1uF
TO252 U43 UTC 78D05
IN OUT GND
EC68 100uF/25V
5V-T
C 3 0.1uF
12V A12V
EC65 220uF/50V
C 32 0.1uF
L71 FB-300-OHM-2000MA
EC1 100uF/25V
C6 0.1uF
C7 0.1uF
12V
L72 FB-300-OHM-2000MA
EC66 100uF/25V
C 06 0.1uF
C 07 0.1uF
SB5V
VCC
L68 120-0805
L69 NC/120-0805
D7 S2A D8 S2A
TO252-3 U33 AP1084-1.8V/adj
IN OUT ADJ/GND
DV18A
L12 120-0805 DV18A
EC63 100uF/25V
C27 0.1uF
R 1 NC 110 1%
EC6 7uF/25V
C396 0.1uF
1.25x(1+48.7/110)=1.8V
R 15 0R 8.7 1%
8202UP3_0 8202UP3_0 3
GPIO2 GPIO2 3
SB33B
SB33
SB5V
L9 120-0805
C21 0.1uF
1.25x(1+48.7/110)=1.8V
SB33A
AIC1117-SOT223-GOI-123
U3 AZ1117-3.3V
IN OUT ADJ/GND
L11 120-0805 SB33A
DV33A
L13 120-0805
C28 0.1uF
EC6 100uF/25V
C23 0.1uF
R1 NC 110 1%
EC7 7uF/25V
C2 0.1uF
C25 0.1uF
R16 0R 180 1%
1.25x(1+180/110)=3.3V
ASB33A
L15 120-0805
C30 0.1uF
AIC1117-SOT223-GOI-123
U4 AZ1117-1.8V/adj
SB18
R15 NC 110 1%
EC8 7uF/25V
C26 0.1uF
R17 0R 8.7 1%
SB18A
L10 120-0805 SB18A
C22 0.1uF
ASB18A
L1 120-0805 ASB18A
C29 0.1uF
SB5V A12V VCC
JP3 NC/200PHD-6LT
FOR ATSC POWER
2 V 12V
LVDSVDD SB5V
VCC SB33B
SB33A DV33A
ASB33A ADCV33A
AV33A DV33B
SB18A DV18A
ASB18A ADCV18A
AV18A 5V-T
SB5V VCC
JP HEADER 2x2-2.5 2X02-25 -HW
EC9 100uF/25V
C31 0.1uF
AIC1117-SOT223-GOI-123
U5 AZ1117-3.3V
IN OUT ADJ/GND
R18 NC 110 1%
EC10 7uF/25V
C32 0.1uF
R21 0R 180 1%
1.25x(1+180/110)=3.3V
ADCV33A
L16 120-0805
C33 0.1uF
AV33A
L18 120-0805
C38 0.1uF
1.25x(1+48.7/110)=1.8V
AIC1117-SOT223-GOI-123
U6 AZ1117-1.8V/adj
R19 NC 110 1%
EC11 7uF/25V
C3 0.1uF
R22 0R 8.7 1%
ADCV18A
L17 120-0805
C35 0.1uF
AV18A
L19 120-0805
C39 0.1uF
VCC
AIC1117-SOT223-GOI-123
U7 AZ1117-3.3V
IN OUT ADJ/GND
DV33B
EC12 100uF/25V
C36 0.1uF
R20 NC 110 1%
EC13 7uF/25V
C37 0.1uF
R23 0R 180 1%
1.25x(1+180/110)=3.3V
Title
POWER & LDO
Size C
Document Number
GF271-XP
Rev C
Date: Thursday, August 10, 2006
Sheet 2 of 13

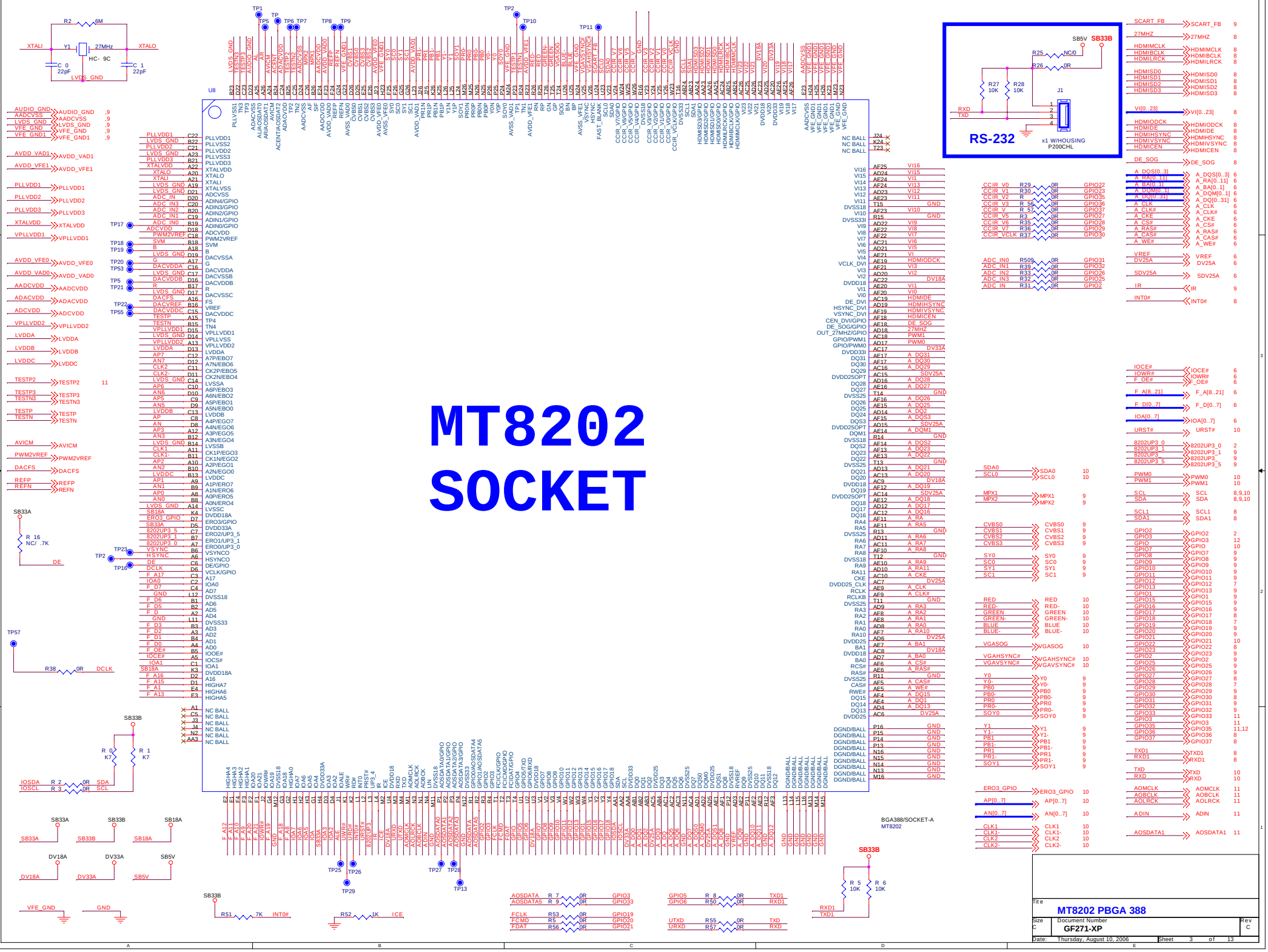
MT8202
SOCKET
U8
BGA388/SOCKET-A
MT8202
RS-232
J1
x1 W/HOUSING
P200CHL
SB5V
SB33B
XTALI
XTALO
Y1
27MHz
HC- 9C
R2
6M
C 0
22pF
C 1
22pF
LVDS_GND
TP1
TP5
TP
TP6
TP7
TP8
TP9
TP2
TP10
TP11
TP17
TP18
TP19
TP20
TP53
TP21
TP22
TP55
TP23
TP16
TP57
TP25
TP26
TP29
TP27
TP28
TP13
R 16
NC/ .7K
DE
R38
0R
DCLK
R 0
K7
R 1
K7
R 2
0R
SDA
R 3
0R
SCL
R25
NC/0
R26
0R
R27
10K
R28
10K
RXD
TXD
R 5
10K
R 6
10K
R51
7K
INT0#
R52
1K
ICE
VFE_GND
GND
DV18A
DV33A
SB5V
SB33A
SB33B
SB18A
AUDIO_GND
AADCVSS
LVDS_GND
VFE_GND
VFE_GND1
AVDD_VAD1
AVDD_VFE1
PLLVDD1
PLLVDD2
PLLVDD3
XTALVDD
VPLLVDD1
AVDD_VFE0
AVDD_VAD0
AADCVDD
ADACVDD
ADCVDD
VPLLVDD2
LVDDA
LVDDB
LVDDC
TESTP2
TESTP3
TESTN3
TESTP
TESTN
AVICM
PWM2VREF
DACFS
REFP
REFN
NC BALL
J24
K24
T23
J3
J4
N2
AA3
A1
C5
DGND/BALL
P16
P15
P14
P13
N16
N15
N14
N13
M16
CCIR_V0
CCIR_V1
CCIR_V2
CCIR_V3
CCIR_V
CCIR_V5
CCIR_V6
CCIR_V7
CCIR_VCLK
ADC_IN0
ADC_IN1
ADC_IN2
ADC_IN3
ADC_IN
R29
R30
R
R 56
R 57
R3
R35
R36
R37
R509
R39
R33
R32
R31
0R
GPIO22
GPIO23
GPIO35
GPIO36
GPIO37
GPIO27
GPIO28
GPIO29
GPIO30
GPIO31
GPIO32
GPIO2
SCART_FB
27MHZ
HDMIMCLK
HDMIBCLK
HDMILRCK
HDMISD0
HDMISD1
HDMISD2
HDMISD3
VI[0..23]
HDMIODCK
HDMIDE
HDMIHSYNC
HDMIVSYNC
HDMICEN
DE_SOG
A_DQS[0..3]
A_RA[0..11]
A_BA[0..1]
A_DQM[0..1]
A_DQ[0..31]
A_CLK
A_CLK#
A_CKE
A_CS#
A_RAS#
A_CAS#
A_WE#
VREF
DV25A
SDV25A
IR
INT0#
IOCE#
IOWR#
F_OE#
F_A[8..21]
F_D[0..7]
IOA[0..7]
URST#
8202UP3_0
8202UP3_1
8202UP3_3
8202UP3_5
PWM0
PWM1
SCL
SDA
SCL1
SDA1
GPIO2
GPIO3
GPIO
GPIO7
GPIO8
GPIO9
GPIO10
GPIO11
GPIO12
GPIO13
GPIO1
GPIO15
GPIO16
GPIO17
GPIO18
GPIO19
GPIO20
GPIO21
GPIO22
GPIO23
GPIO25
GPIO26
GPIO27
GPIO28
GPIO29
GPIO30
GPIO31
GPIO32
GPIO33
GPIO35
GPIO36
GPIO37
TXD1
RXD1
TXD
RXD
AOMCLK
AOBCLK
AOLRCK
ADIN
AOSDATA1
SDA0
SCL0
MPX1
MPX2
CVBS0
CVBS1
CVBS2
CVBS3
SY0
SC0
SY1
SC1
RED
RED-
GREEN
GREEN-
BLUE
BLUE-
VGASOG
VGAHSYNC#
VGAVSYNC#
Y0
Y0-
PB0
PB0-
PR0
PR0-
SOY0
Y1
Y1-
PB1
PB1-
PR1
PR1-
SOY1
ERO3_GPIO
AP[0..7]
AN[0..7]
CLK1
CLK1-
CLK2
CLK2-
GPIO5
GPIO6
R 8
R50
UTXD
URXD
R55
R57
AOSDATA
AOSDATA5
R 7
R 9
FCLK
FCMD
FDAT
R53
R5
R56
GPIO3
GPIO33
GPIO19
GPIO20
GPIO21
Title
MT8202 PBGA 388
Size
C
Document Number
GF271-XP
Rev
C
Date: Thursday, August 10, 2006
Sheet 3 of 13

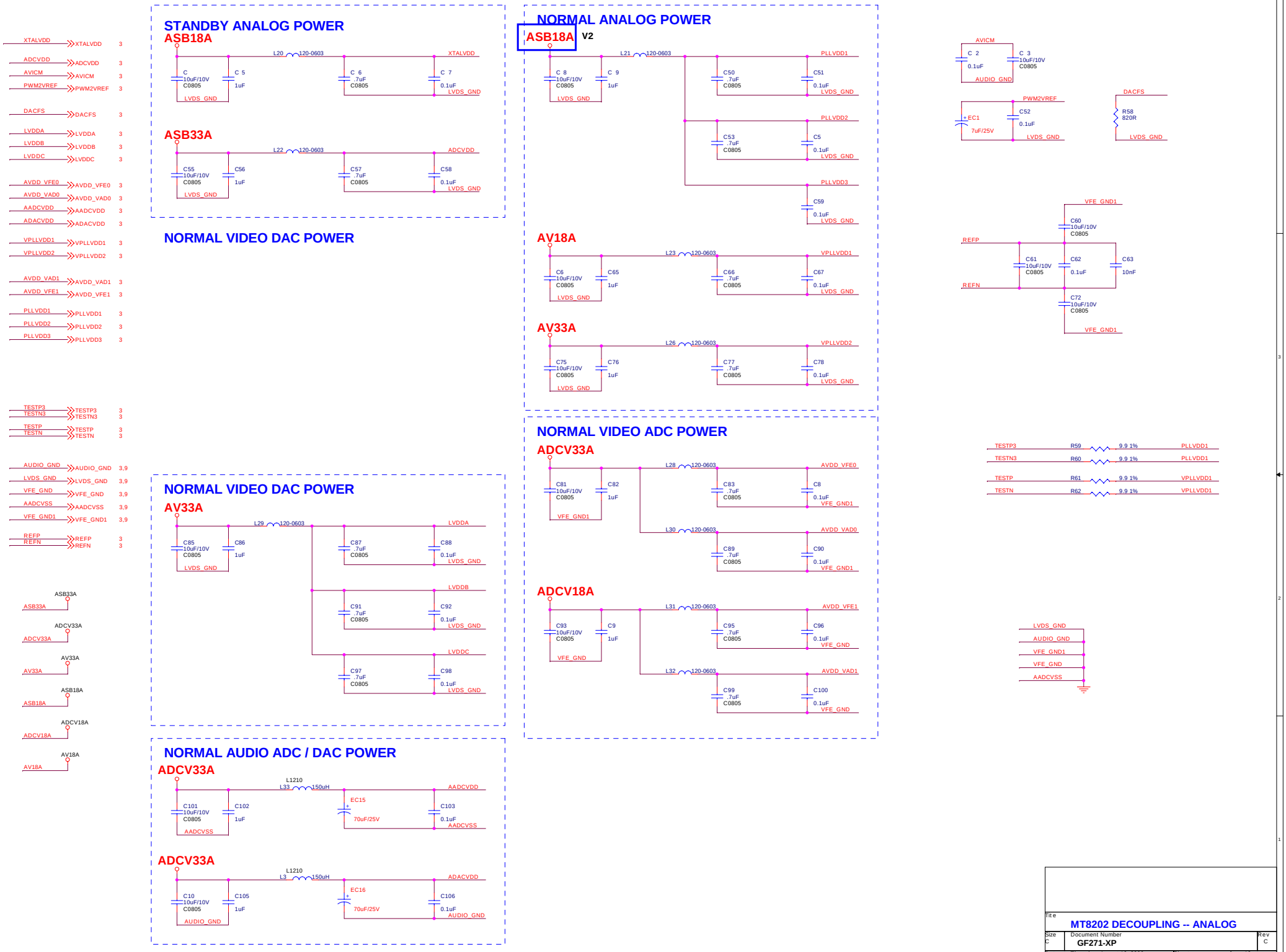
STANDBY ANALOG POWER
ASB18A
XTALVDD
L20 120-0603
C 10uF/10V C0805
C 5 1uF
C 6 .7uF C0805
C 7 0.1uF
LVDS_GND
ASB33A
ADCVDD
L22 120-0603
C55 10uF/10V C0805
C56 1uF
C57 .7uF C0805
C58 0.1uF
NORMAL ANALOG POWER
ASB18A V2
L21 120-0603
C 8 10uF/10V C0805
C 9 1uF
C50 .7uF C0805
C51 0.1uF
PLLVDD1
PLLVDD2
PLLVDD3
C53 .7uF C0805
C5 0.1uF
C59 0.1uF
AV18A
L23 120-0603
C6 10uF/10V C0805
C65 1uF
C66 .7uF C0805
C67 0.1uF
VPLLVDD1
AV33A
L26 120-0603
C75 10uF/10V C0805
C76 1uF
C77 .7uF C0805
C78 0.1uF
VPLLVDD2
AVICM
C 2 0.1uF
C 3 10uF/10V C0805
AUDIO_GND
PWM2VREF
EC1 7uF/25V
C52 0.1uF
DACFS
R58 820R
VFE_GND1
C60 10uF/10V C0805
REFP
REFN
C61 10uF/10V C0805
C62 0.1uF
C63 10nF
C72 10uF/10V C0805
NORMAL VIDEO DAC POWER
AV33A
L29 120-0603
C85 10uF/10V C0805
C86 1uF
C87 .7uF C0805
C88 0.1uF
LVDDA
LVDDB
C91 .7uF C0805
C92 0.1uF
LVDDC
C97 .7uF C0805
C98 0.1uF
NORMAL VIDEO ADC POWER
ADCV33A
L28 120-0603
C81 10uF/10V C0805
C82 1uF
C83 .7uF C0805
C8 0.1uF
AVDD_VFE0
VFE_GND1
L30 120-0603
C89 .7uF C0805
C90 0.1uF
AVDD_VAD0
ADCV18A
L31 120-0603
C93 10uF/10V C0805
C9 1uF
C95 .7uF C0805
C96 0.1uF
AVDD_VFE1
VFE_GND
L32 120-0603
C99 .7uF C0805
C100 0.1uF
AVDD_VAD1
TESTP3 R59 9.9 1% PLLVDD1
TESTN3 R60 9.9 1% PLLVDD1
TESTP R61 9.9 1% VPLLVDD1
TESTN R62 9.9 1% VPLLVDD1
LVDS_GND
AUDIO_GND
VFE_GND1
VFE_GND
AADCVSS
NORMAL AUDIO ADC / DAC POWER
ADCV33A
L1210
L33 150uH
C101 10uF/10V C0805
C102 1uF
EC15 70uF/25V
C103 0.1uF
AADCVDD
AADCVSS
L3 150uH
C10 10uF/10V C0805
C105 1uF
EC16 70uF/25V
C106 0.1uF
ADACVDD
XTALVDD
ADCVDD
AVICM
PWM2VREF
DACFS
LVDDA
LVDDB
LVDDC
AVDD_VFE0
AVDD_VAD0
AADCVDD
ADACVDD
VPLLVDD1
VPLLVDD2
AVDD_VAD1
AVDD_VFE1
PLLVDD1
PLLVDD2
PLLVDD3
TESTP3
TESTN3
TESTP
TESTN
AUDIO_GND
LVDS_GND
VFE_GND
AADCVSS
VFE_GND1
REFP
REFN
ASB33A
ADCV33A
AV33A
ASB18A
ADCV18A
AV18A
Title
MT8202 DECOUPLING -- ANALOG
Size C
Document Number
GF271-XP
Rev C
Date: Thursday, August 10, 2006
Sheet of 13

# MT8202 DIGITAL POWER & DECOUPLING

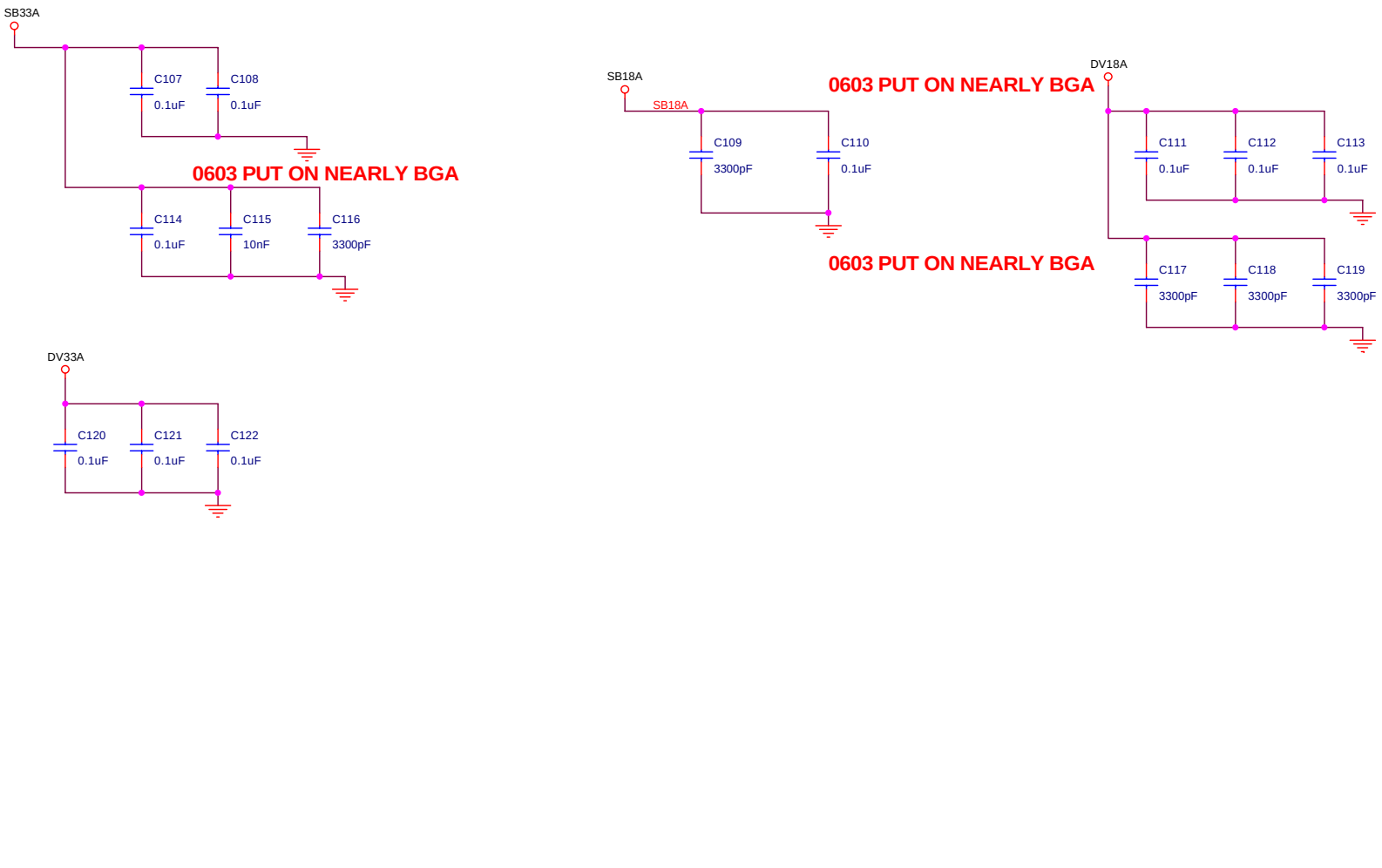


| | | |
|---|---|---|
| Title | MT8202 DECOUPLING -- DIGITAL | |
| Size B | Document Number GF271-XP | Rev C |
| Date: Thursday, August 10, 2006 | Sheet 5 of 13 | |

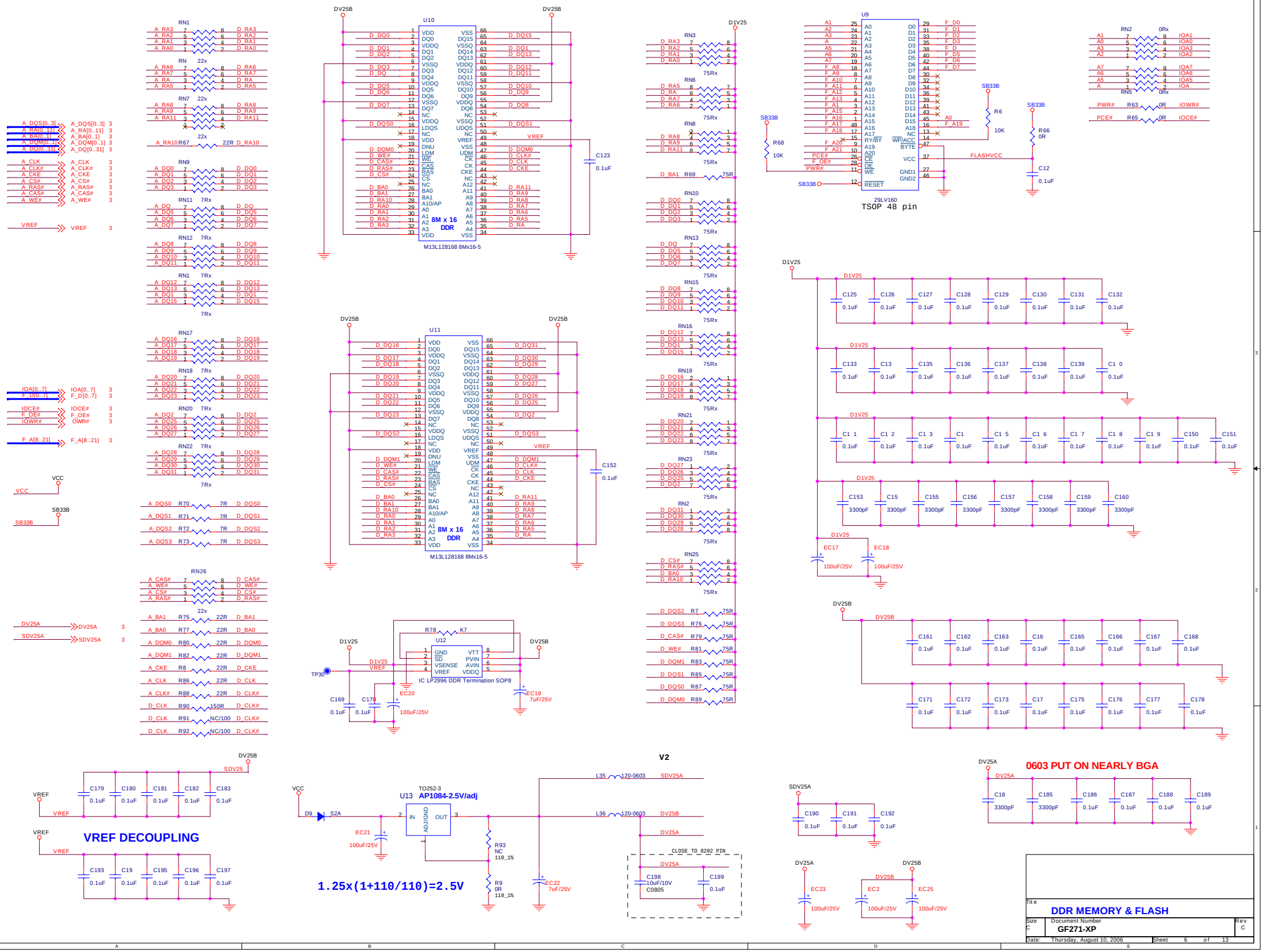
U10
8M x 16
DDR
M13L128168 8Mx16-5
U11
8M x 16
DDR
M13L128168 8Mx16-5
U12
IC LP2996 DDR Termination SOP8
U9
29LV160
TSOP 48 pin
VREF DECOUPLING
U13 AP1084-2.5V/adj
TO252-3
1.25x(1+110/110)=2.5V
V2
CLOSE_TO_8202_PIN
0603 PUT ON NEARLY BGA
DDR MEMORY & FLASH
GF271-XP
Date: Thursday, August 10, 2006
Sheet 6 of 13

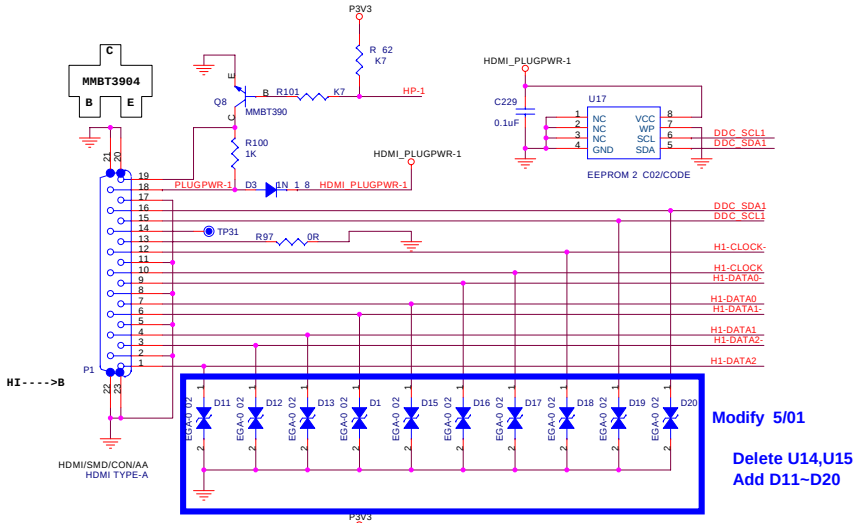


Modify 5/01

Delete U14,U15
Add D11~D20

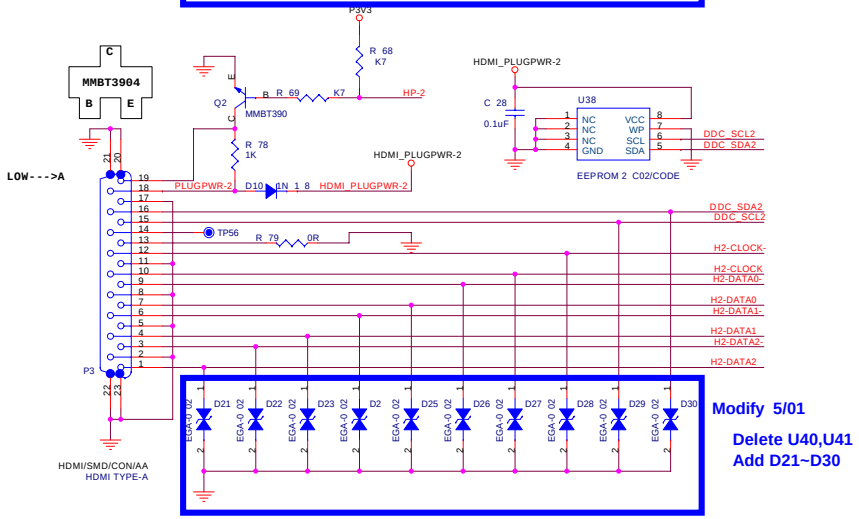


Modify 5/01

Delete U40,U41
Add D21~D30

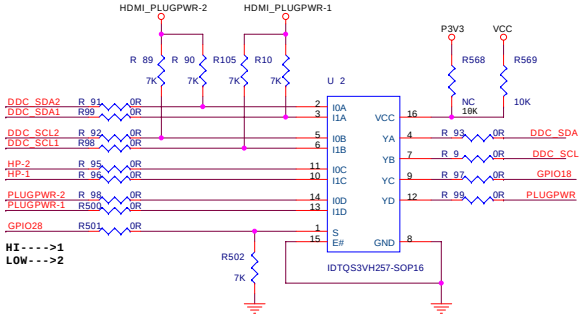


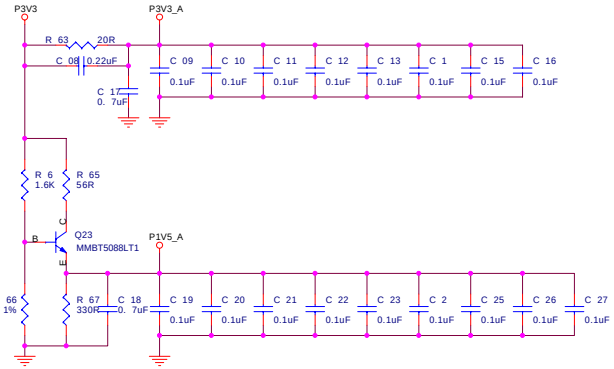


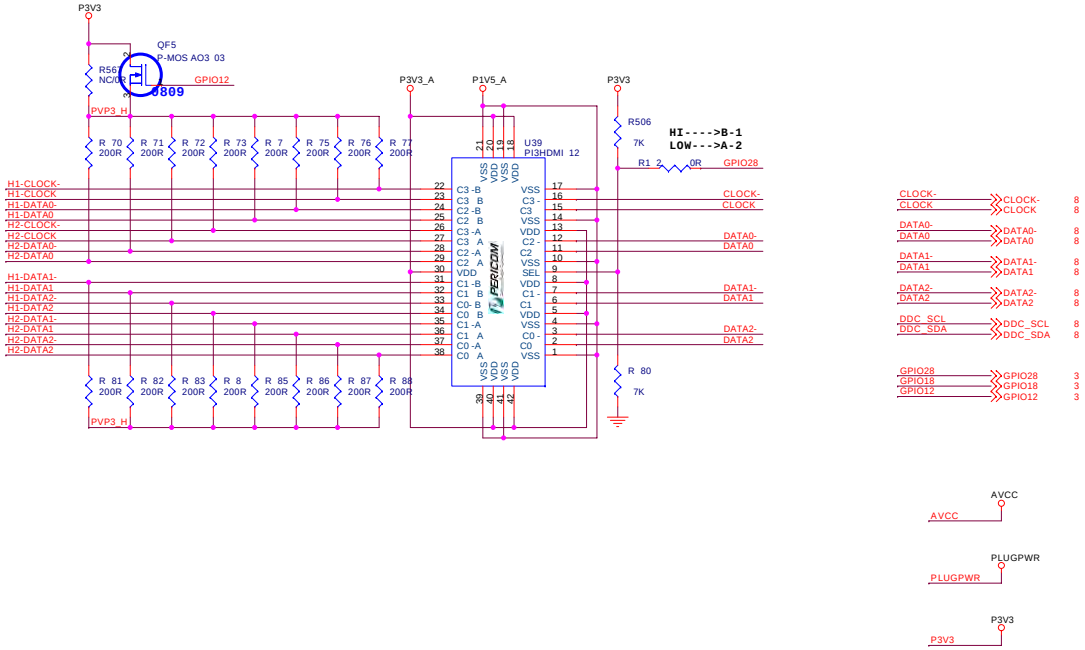


| Title | | |
|---|---|---|
| HDMI INPUT & SWITCH | | |
| Size C | Document Number GF271-XP | Rev C |
| Date: Thursday, August 10, 2006 | Sheet 7 of 13 | |

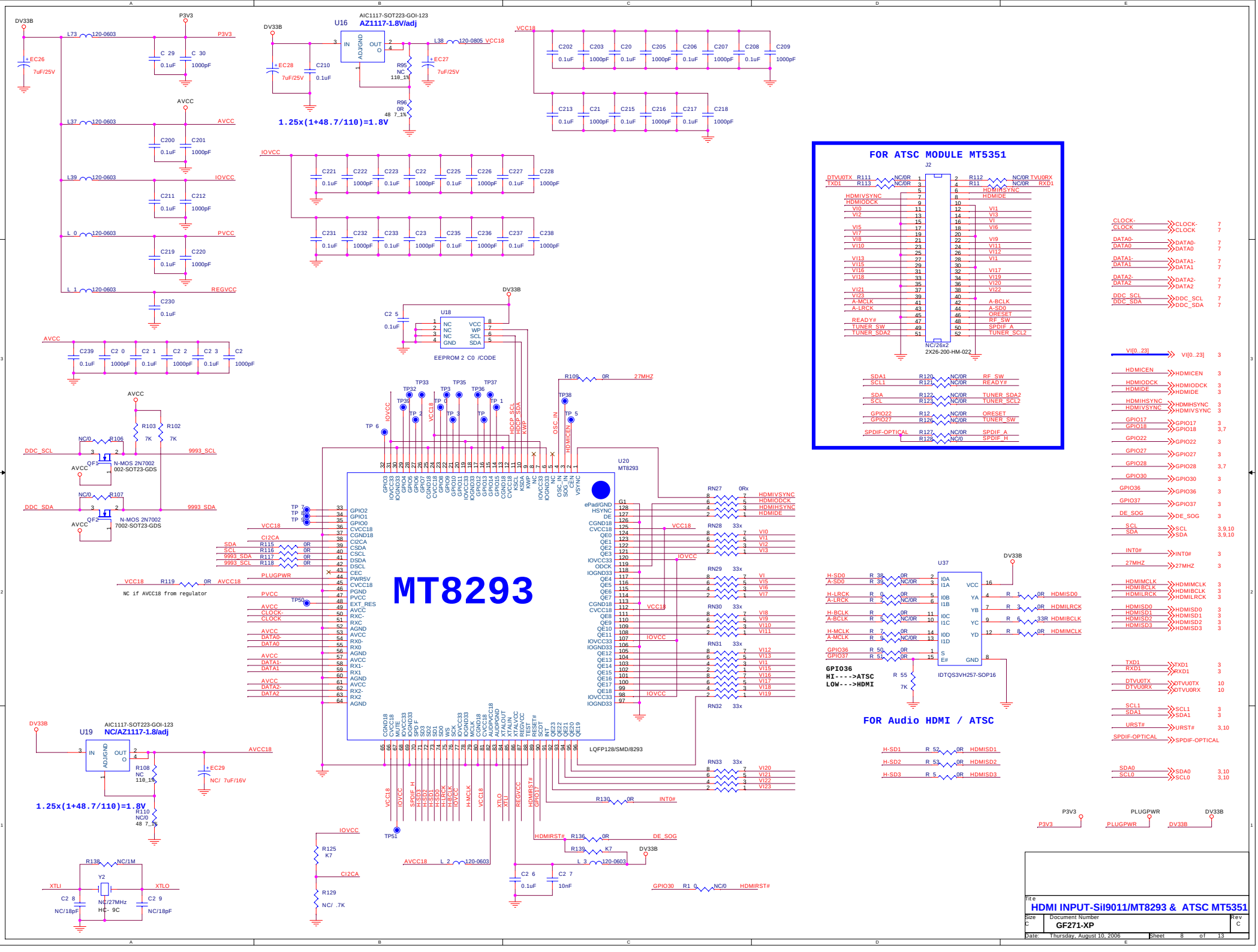
MT8293
U20
U16
AZ1117-1.8V/adj
AIC1117-SOT223-GOI-123
U19
NC/AZ1117-1.8/adj
1.25x(1+48.7/110)=1.8V
FOR ATSC MODULE MT5351
J2
NC/26x2
2X26-200-HM-022
EEPROM 2 C0 /CODE
U18
N-MOS 2N7002
002-SOT23-GDS
7002-SOT23-GDS
NC if AVCC18 from regulator
LQFP128/SMD/8293
U37
IDTQS3VH257-SOP16
GPIO36
HI---->ATSC
LOW--->HDMI
FOR Audio HDMI / ATSC
Y2
NC/27MHz
HC- 9C
Title
HDMI INPUT-Sil9011/MT8293 & ATSC MT5351
Size
C
Document Number
GF271-XP
Rev
C
Date: Thursday, August 10, 2006
Sheet 8 of 13

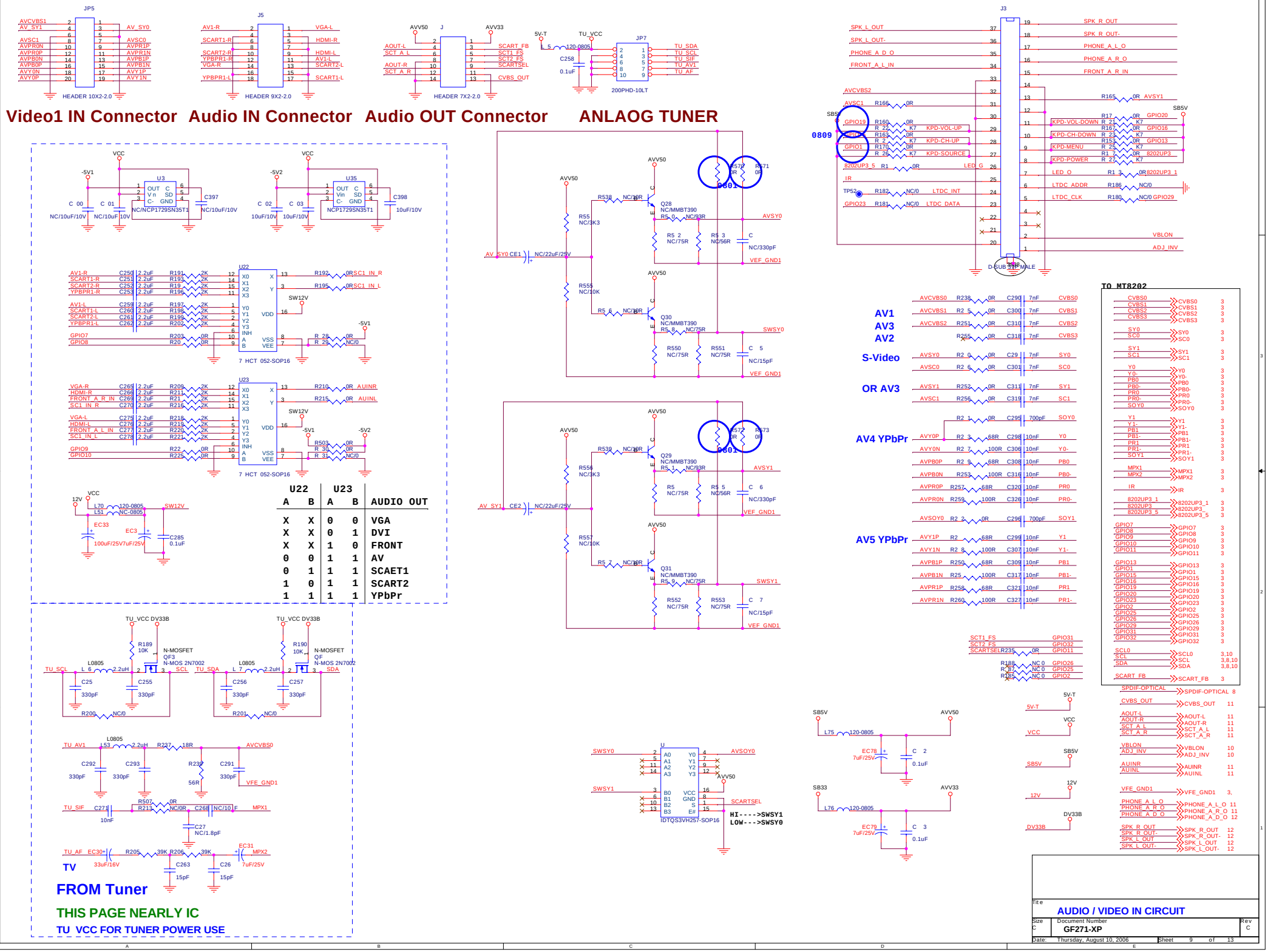
Video1 IN Connector
Audio IN Connector
Audio OUT Connector
ANLAOG TUNER
JP5
J5
J
JP7
200PHD-10LT
HEADER 10X2-2.0
HEADER 9X2-2.0
HEADER 7X2-2.0
J3
D-SUB 37P MALE
U22
U23
7 HCT 052-SOP16
U
IDTQS3VH257-SOP16
HI---->SWSY1
LOW--->SWSY0
AUDIO OUT
VGA
DVI
FRONT
AV
SCAET1
SCART2
YPbPr
AV1
AV3
AV2
S-Video
OR AV3
AV4 YPbPr
AV5 YPbPr
TO MT8202
TV
FROM Tuner
THIS PAGE NEARLY IC
TU_VCC FOR TUNER POWER USE
AUDIO / VIDEO IN CIRCUIT
GF271-XP
Thursday, August 10, 2006
Sheet 9 of 13

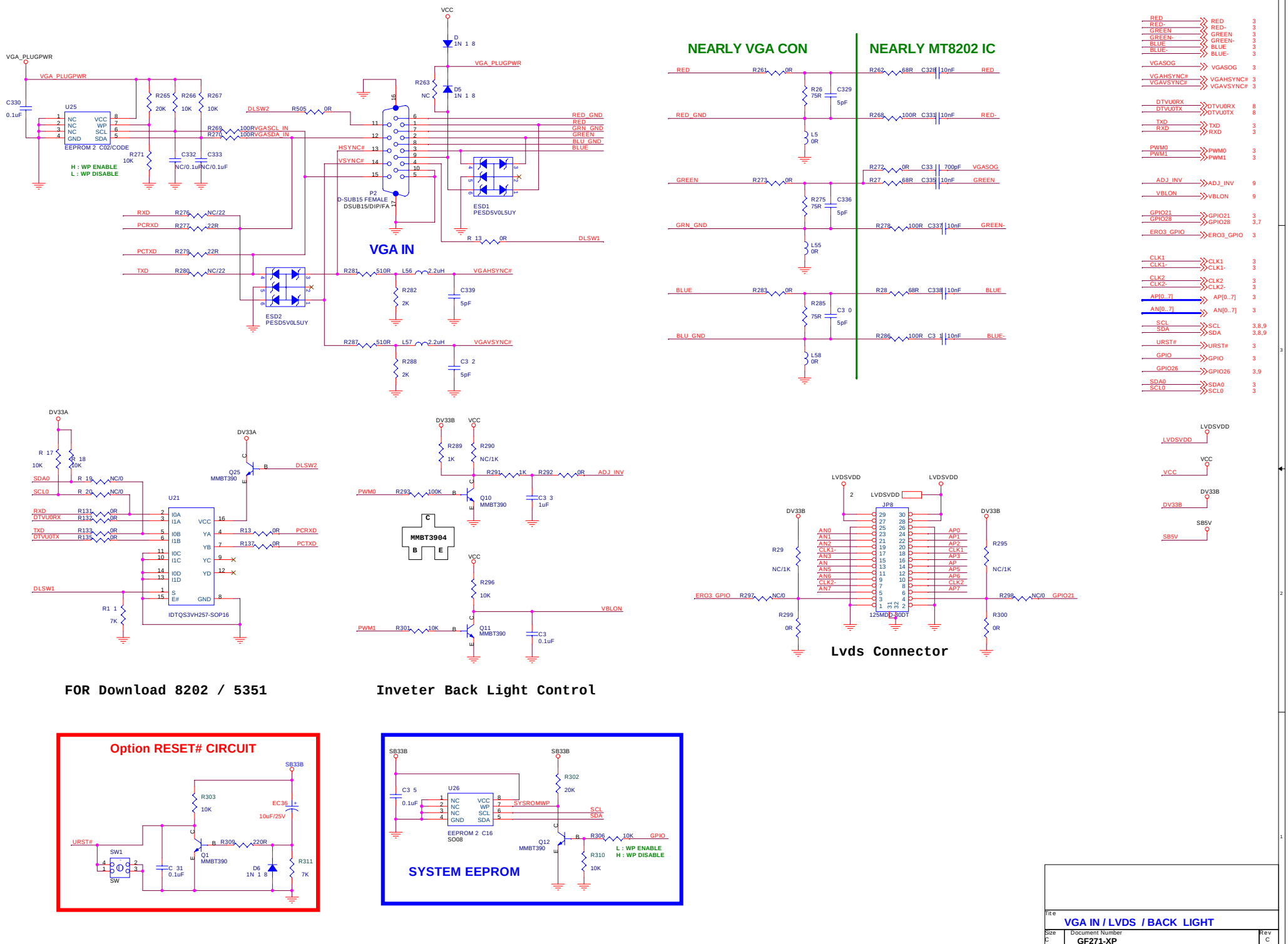
VGA IN
NEARLY VGA CON
NEARLY MT8202 IC
FOR Download 8202 / 5351
Inveter Back Light Control
Lvds Connector
Option RESET# CIRCUIT
SYSTEM EEPROM
H : WP ENABLE
L : WP DISABLE
EEPROM 2 C02/CODE
D-SUB15 FEMALE
DSUB15/DIP/FA
ESD1
PESD5V0L5UY
ESD2
PESD5V0L5UY
IDTQS3VH257-SOP16
MMBT3904
125MDD-30DT
EEPROM 2 C16
SO08
VGA_PLUGPWR
VCC
DV33A
DV33B
LVDSVDD
SB33B
SB5V
Title
VGA IN / LVDS / BACK LIGHT
Size C
Document Number
GF271-XP
Rev C
Date: Thursday, August 10, 2006
Sheet 10 of 13

# AUDIO ADC TO MT8202

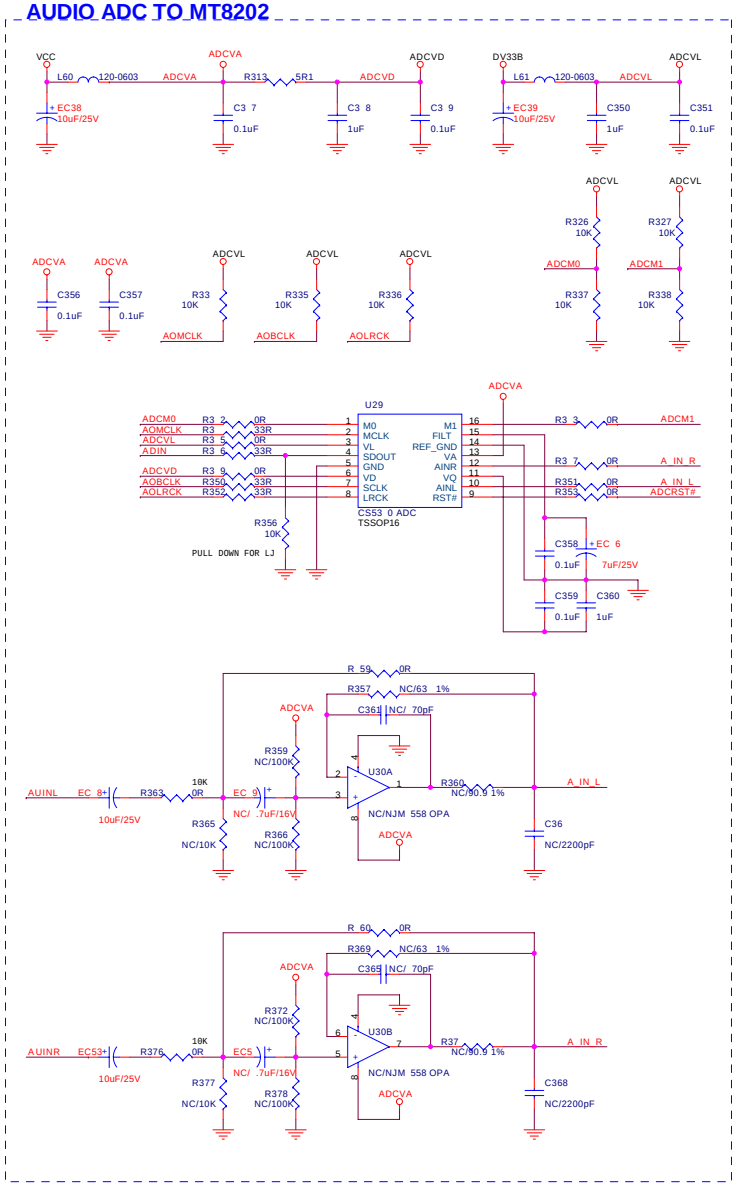


# AUDIO DAC

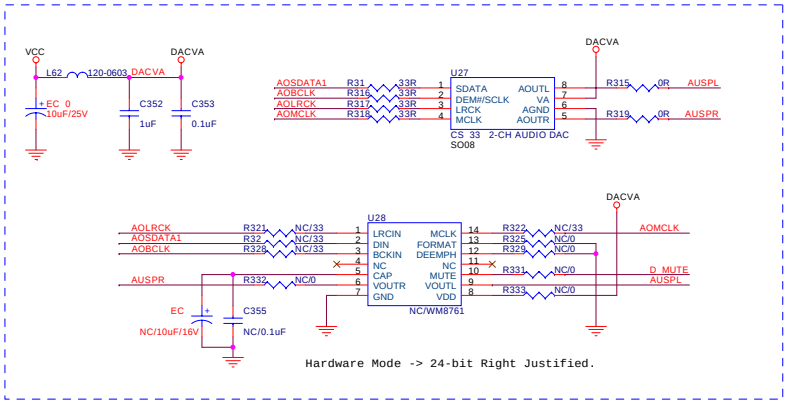


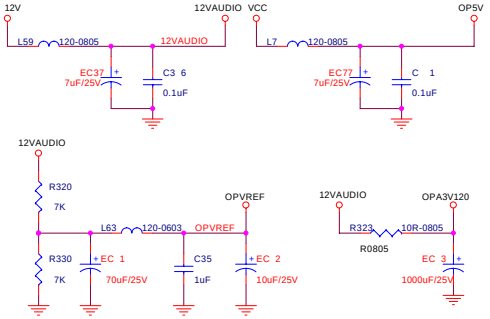


## SPEAKER OUTPUT

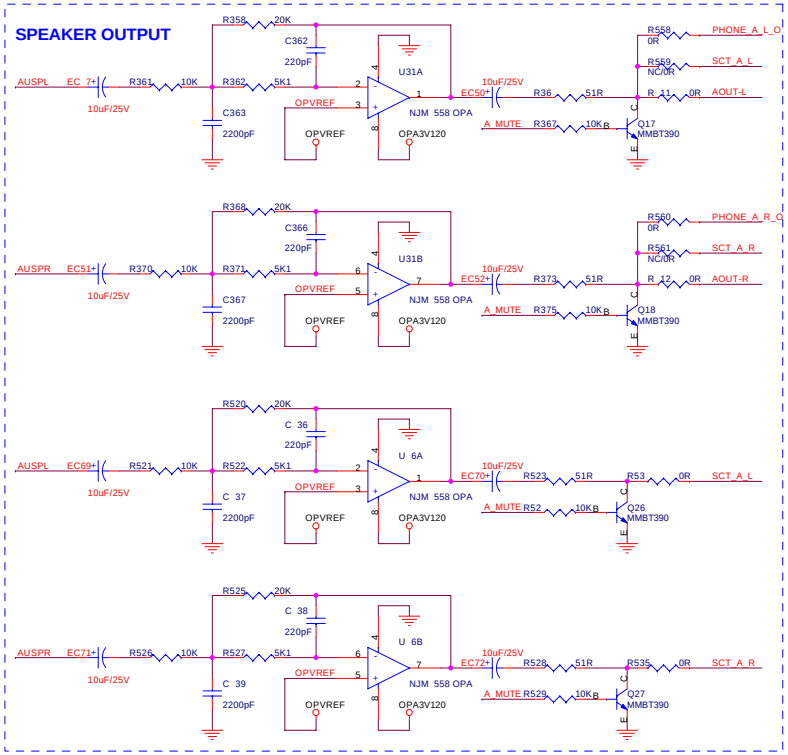


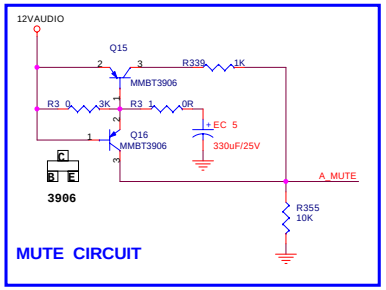


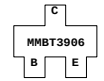


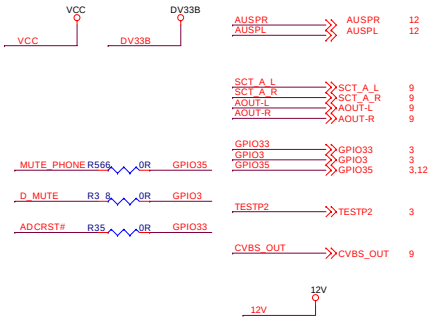


## AUDIO DAC

## AUDIO ADC

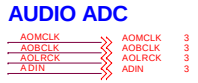


# BYPASS VIDEO OUTPUT

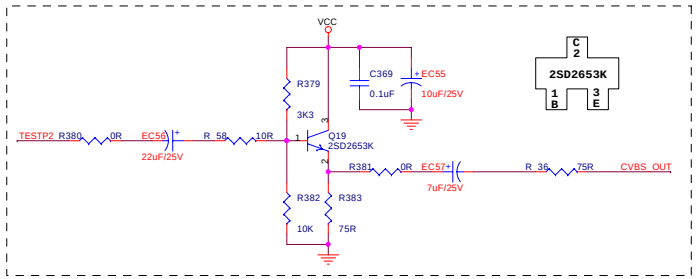


# HEADPHONE OUTPUT

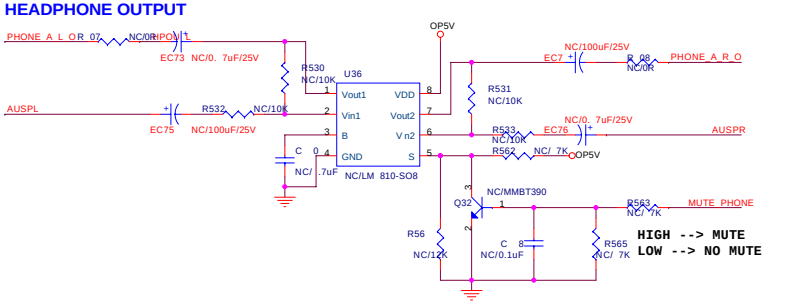


| | | |
|---|---|---|
| Title | AUDIO ADC / DAC & OP | |
| Size C | Document Number GF271-XP | Rev C |
| Date: Thursday, August 10, 2006 | Sheet 11 of 13 | |

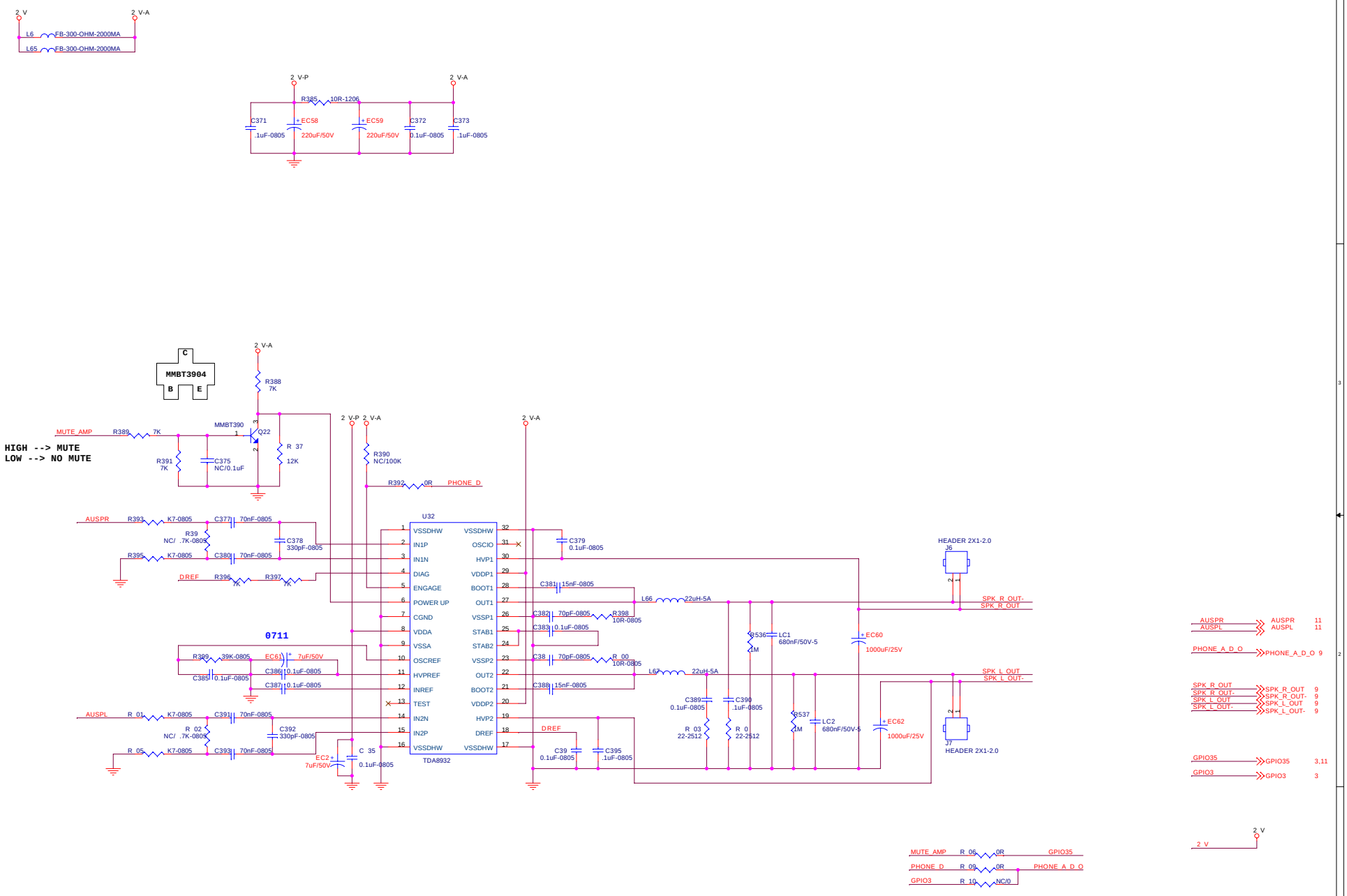


Title
**AUDIO AMP**

| Size | Document Number | Rev |
|---|---|---|
| C | GF271-XP | C |

Date: Thursday, August 10, 2006 Sheet 12 of 13

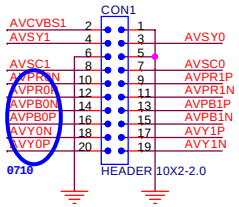


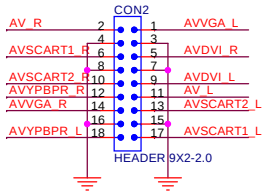


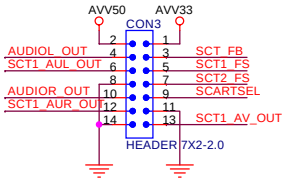


# Video IN Connector  Audio IN Connector  Audio OUT Connector

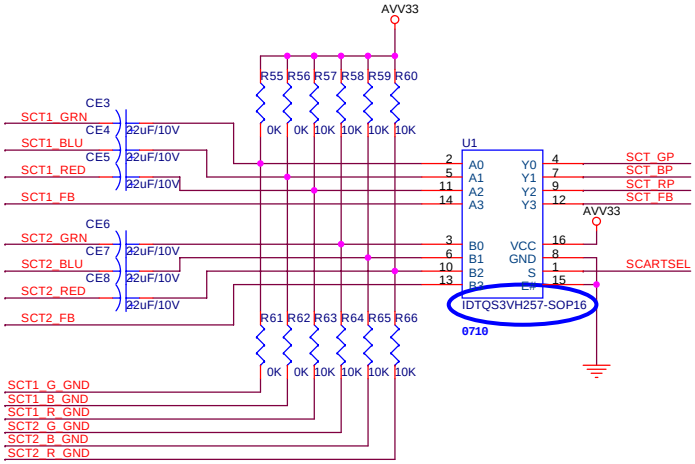


AVCVBS1 — AV1
AVSY0 — SCT1_AV
AVSC0 — SCT1_SC
AVSY1 — SCT2_AV
AVSC1 — SCT2_SC

AVPR1P — SCT_RP
AVPR1N — FB1 0R — GNDV
AVPB1P — SCT_BP
AVPB1N — FB2 0R — GNDV
AVY1P — SCT_GP
AVY1N — FB3 0R — GNDV

AVDVI_R — DVIR_IN
AVDVI_L — DVIL_IN

AVVGA_R — VGAR_IN
AVVGA_L — VGAL_IN

AVYPBPR_R — YPBPR1R_IN
AVYPBPR_L — YPBPR1L_IN

AVSCART1_R — SCT1_AUR_IN
AVSCART1_L — SCT1_AUL_IN
AVSCART2_R — SCT2_AUR_IN
AVSCART2_L — SCT2_AUL_IN

AV_R — AV1R_IN
AV_L — AV1L_IN

GNDA
GNDV

SCT1_G_GND — SCT1_G_GND 2
SCT1_B_GND — SCT1_B_GND 2
SCT1_R_GND — SCT1_R_GND 2
SCT2_G_GND — SCT2_G_GND 2
SCT2_B_GND — SCT2_B_GND 2
SCT2_R_GND — SCT2_R_GND 2

## VIDEO I/F

### CVBS IN

AV1 — AV1CVBS 3
SCT1_AV — SCT1_AV 2
SCT2_AV — SCT2_AV 2

### S-Video IN

SCT1_SC — SCT1_SC 2
SCT2_SC — SCT2_SC 2

### RGB IN

SCT1_GRN — SCT1_GRN 2
SCT1_BLU — SCT1_BLU 2
SCT1_RED — SCT1_RED 2
SCT2_GRN — SCT2_GRN 2
SCT2_BLU — SCT2_BLU 2
SCT2_RED — SCT2_RED 2

### Component IN

AVY0P — AVY0P 3
AVY0N — AVY0N 3
AVPB0P — AVPB0P 3
AVPB0N — AVPB0N 3
AVPR0P — AVPR0P 3
AVPR0N — AVPR0N 3

## AUDIO I/F

### DVI IN

DVIR_IN — DVIR_IN 3
DVIL_IN — DVIL_IN 3

### VGA IN

VGAR_IN — VGAR_IN 3
VGAL_IN — VGAL_IN 3

### YPBPR IN

YPBPR1R_IN — YPBPR1R_IN 3
YPBPR1L_IN — YPBPR1L_IN 3

### SCART IN

SCT1_AUR_IN — SCT1_AUR_IN 2
SCT1_AUL_IN — SCT1_AUL_IN 2
SCT2_AUR_IN — SCT2_AUR_IN 2
SCT2_AUL_IN — SCT2_AUL_IN 2

### AV IN

AV1R_IN — AV1R_IN 3
AV1L_IN — AV1L_IN 3

## OUTPUT I/F

### SCART1 CVBS OUT

SCT1_AV_OUT — SCT1_AV_OUT 2
SCT1_AVO_GND — SCT1_AVO_GND 2

### SCART1 AUDIO OUT

SCT1_AUR_OUT — SCT1_AUR_OUT 2
SCT1_AUL_OUT — SCT1_AUL_OUT 2

### RCA AUDIO OUT

AUDIOR_OUT — AUDIOR_OUT 3
AUDIOL_OUT — AUDIOL_OUT 3

## SCART Select

SCT1_FS — SCT1_FS 2
SCT2_FS — SCT2_FS 2
SCT1_FB — SCT1_FB 2
SCT2_FB — SCT2_FB 2

## CONTROL

SCARTSEL — SCARTSEL

| | | |
|---|---|---|
| Title | INTERFACE | |
| Size A3 | Document Number <Doc> | Rev B |
| Date: Tuesday, August 01, 2006 | Sheet 1 of 4 | |

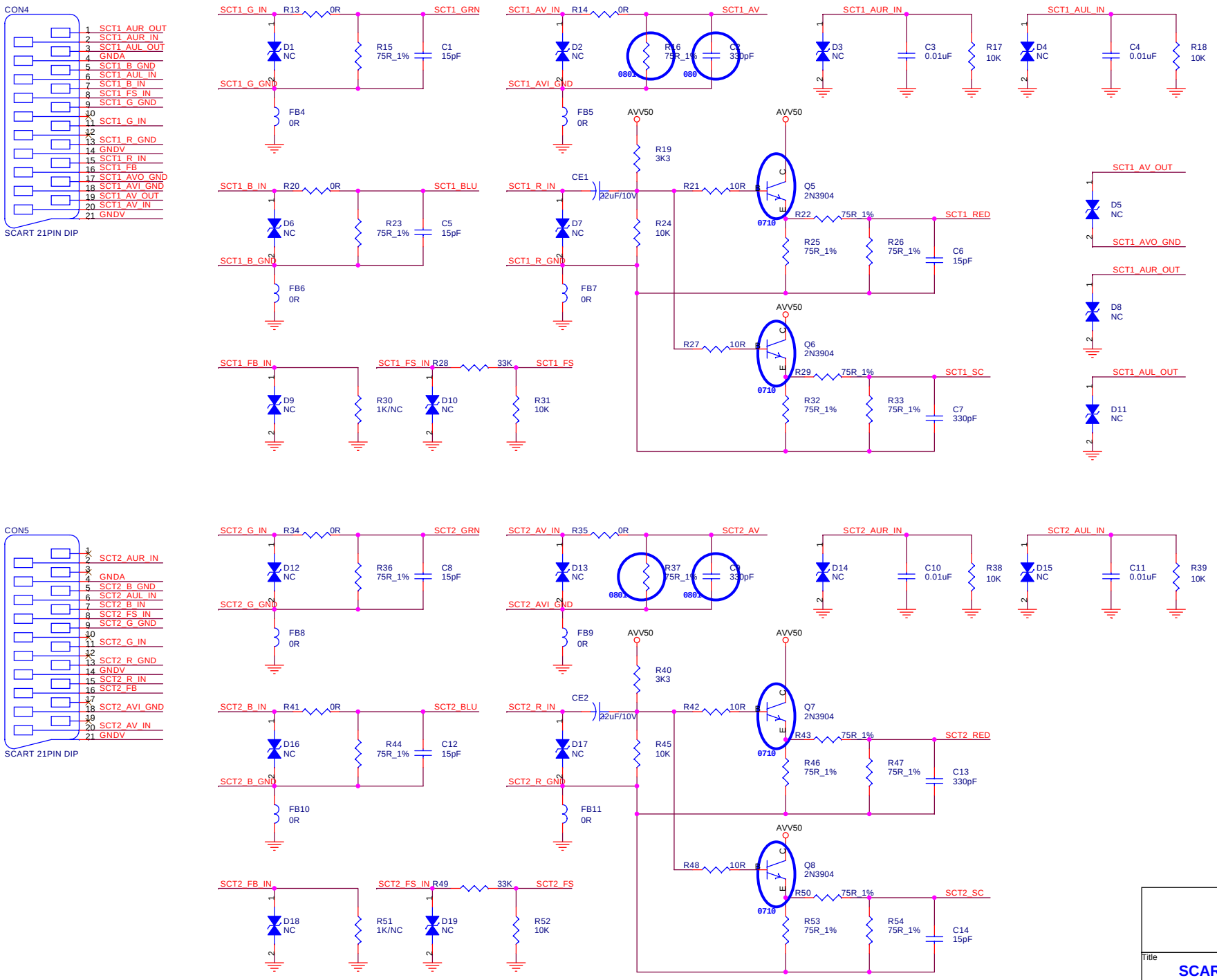


Title
# SCART AUDIO & VIDEO IN/OUT

| Size | Document Number | Rev |
|---|---|---|
| A3 | <Doc> | B |

Date: Tuesday, August 01, 2006 Sheet 2 of 4

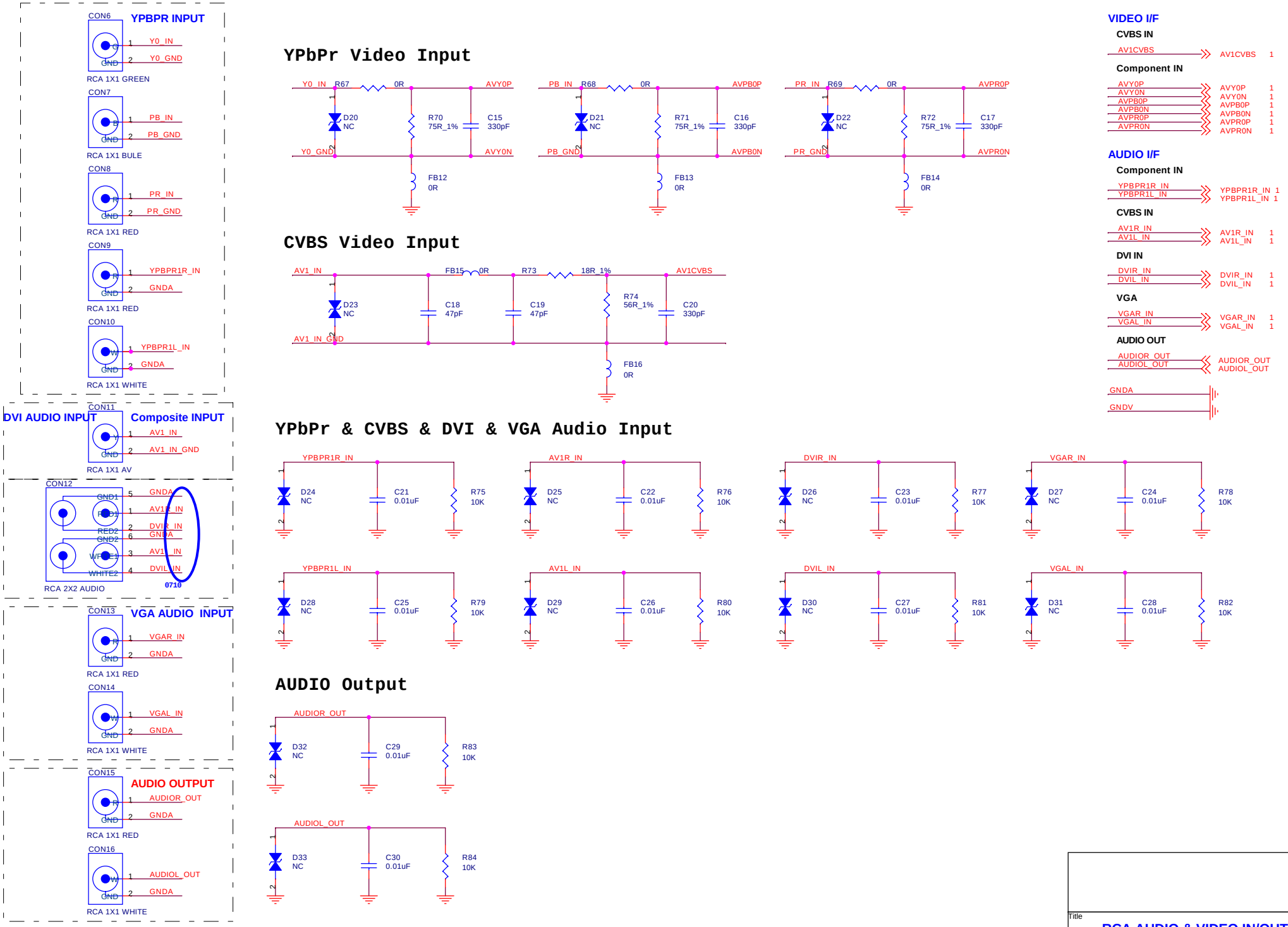
YPBPR INPUT
CON6
Y0_IN
Y0_GND
RCA 1X1 GREEN
CON7
PB_IN
PB_GND
RCA 1X1 BULE
CON8
PR_IN
PR_GND
RCA 1X1 RED
CON9
YPBPR1R_IN
GNDA
RCA 1X1 RED
CON10
YPBPR1L_IN
GNDA
RCA 1X1 WHITE
DVI AUDIO INPUT
Composite INPUT
CON11
AV1_IN
AV1_IN_GND
RCA 1X1 AV
CON12
GNDA
AV1R_IN
DVIR_IN
GNDA
AV1L_IN
DVIL_IN
RCA 2X2 AUDIO
0710
VGA AUDIO INPUT
CON13
VGAR_IN
GNDA
RCA 1X1 RED
CON14
VGAL_IN
GNDA
RCA 1X1 WHITE
AUDIO OUTPUT
CON15
AUDIOR_OUT
GNDA
RCA 1X1 RED
CON16
AUDIOL_OUT
GNDA
RCA 1X1 WHITE
YPbPr Video Input
Y0_IN R67 0R AVY0P
D20 NC
R70 75R_1%
C15 330pF
Y0_GND AVY0N
FB12 0R
PB_IN R68 0R AVPB0P
D21 NC
R71 75R_1%
C16 330pF
PB_GND AVPB0N
FB13 0R
PR_IN R69 0R AVPR0P
D22 NC
R72 75R_1%
C17 330pF
PR_GND AVPR0N
FB14 0R
CVBS Video Input
AV1_IN FB15 0R R73 18R_1% AV1CVBS
D23 NC
C18 47pF
C19 47pF
R74 56R_1%
C20 330pF
AV1_IN_GND
FB16 0R
YPbPr & CVBS & DVI & VGA Audio Input
YPBPR1R_IN
D24 NC
C21 0.01uF
R75 10K
AV1R_IN
D25 NC
C22 0.01uF
R76 10K
DVIR_IN
D26 NC
C23 0.01uF
R77 10K
VGAR_IN
D27 NC
C24 0.01uF
R78 10K
YPBPR1L_IN
D28 NC
C25 0.01uF
R79 10K
AV1L_IN
D29 NC
C26 0.01uF
R80 10K
DVIL_IN
D30 NC
C27 0.01uF
R81 10K
VGAL_IN
D31 NC
C28 0.01uF
R82 10K
AUDIO Output
AUDIOR_OUT
D32 NC
C29 0.01uF
R83 10K
AUDIOL_OUT
D33 NC
C30 0.01uF
R84 10K
VIDEO I/F
CVBS IN
AV1CVBS
Component IN
AVY0P
AVY0N
AVPB0P
AVPB0N
AVPR0P
AVPR0N
AUDIO I/F
Component IN
YPBPR1R_IN
YPBPR1L_IN
CVBS IN
AV1R_IN
AV1L_IN
DVI IN
DVIR_IN
DVIL_IN
VGA
VGAR_IN
VGAL_IN
AUDIO OUT
AUDIOR_OUT
AUDIOL_OUT
GNDA
GNDV
Title
RCA AUDIO & VIDEO IN/OUT
Size A3
Document Number <Doc>
Rev B
Date: Tuesday, August 01, 2006
Sheet 3 of 4

## IR/LED Board

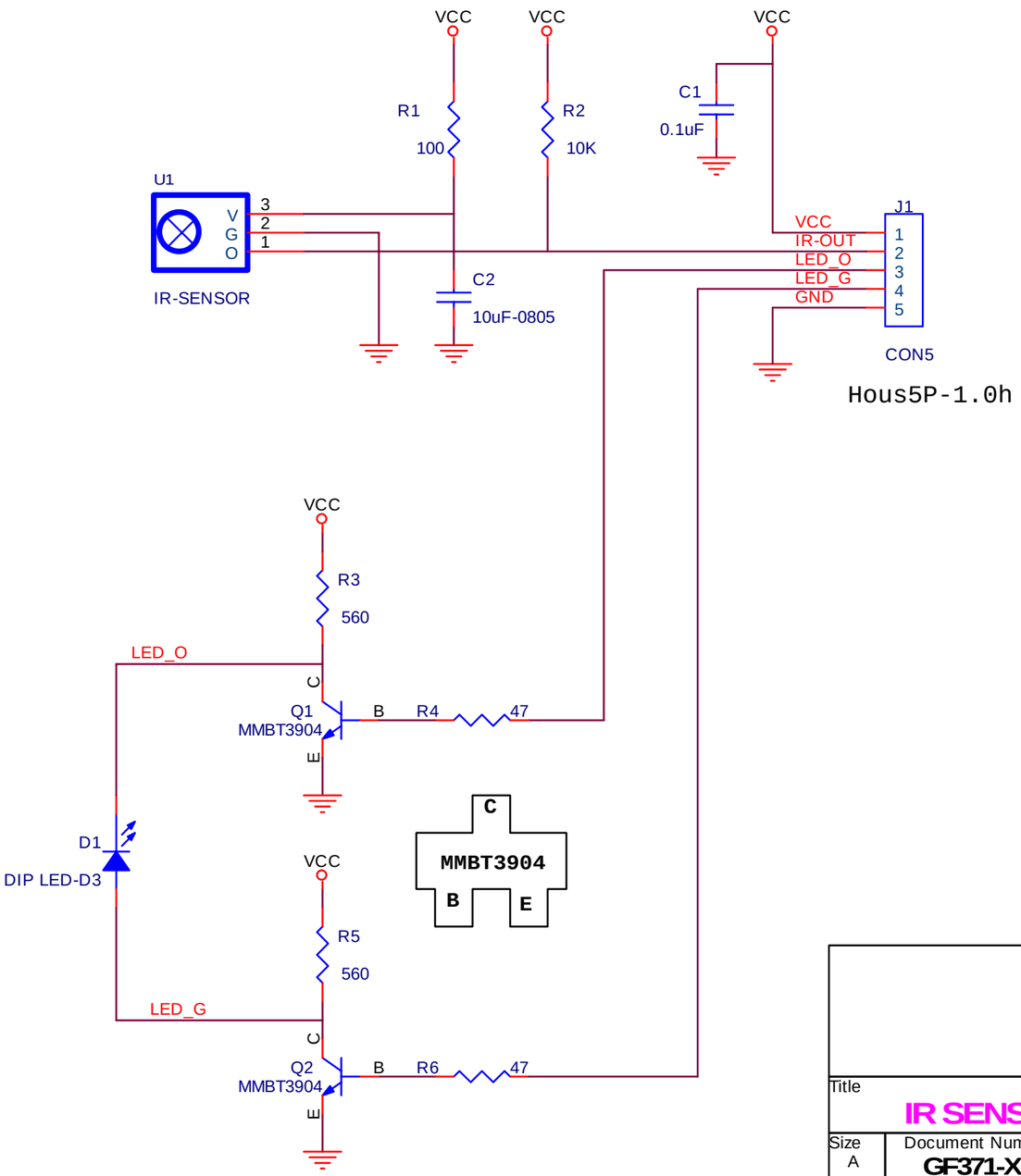


| | | | |
|---|---|---|---|
| Title | IR SENSOR PCB | | |
| Size A | Document Number GF371-XU | | Rev A |
| Date: Tuesday, December 20, 2005 | | Sheet 1 of 1 | |

## Keypad Board

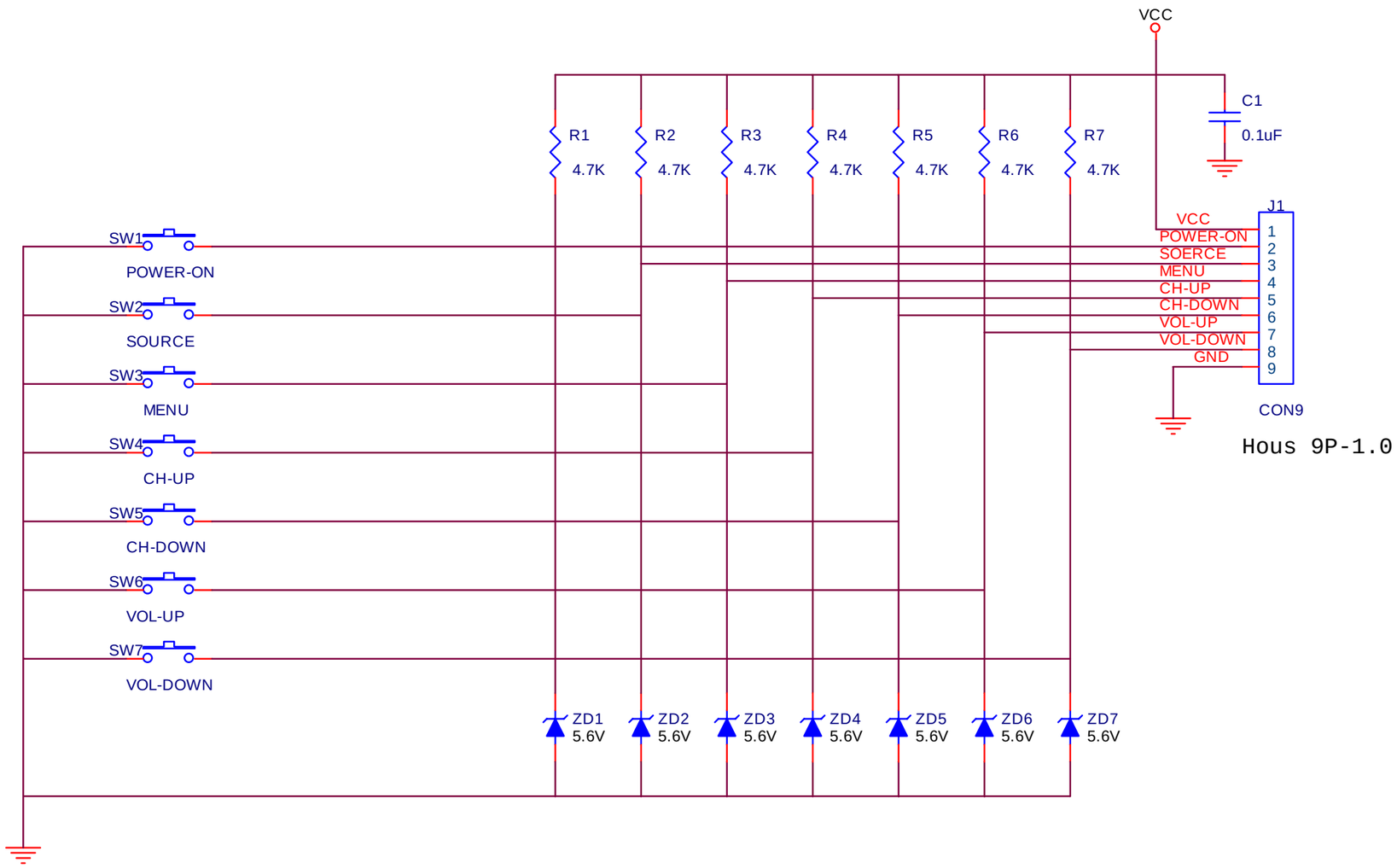


| | | | |
|---|---|---|---|
| Title | KEYPAD PCB | | |
| Size A | Document Number GF371-XU | | Rev A |
| Date: | Friday, September 30, 2005 | Sheet 1 of 1 | |

## AV AUX Board

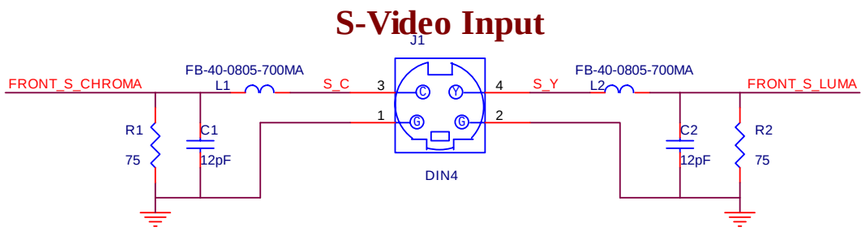


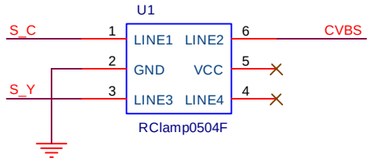


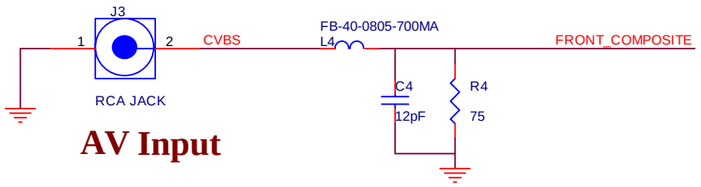


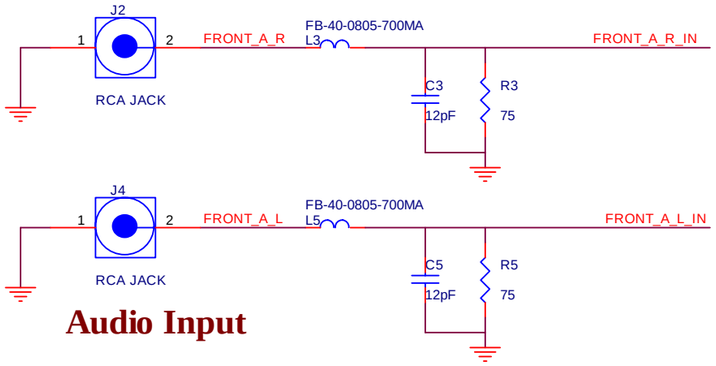


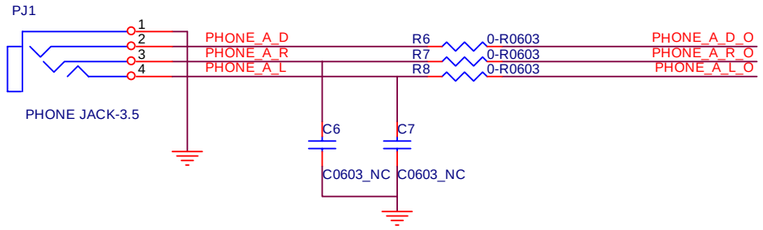


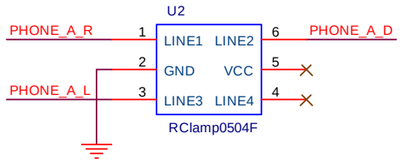


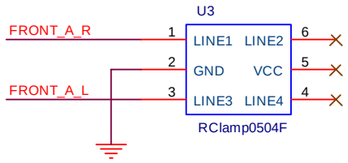


CON1 : FRONT AV INPUT/OUTPUT  200PHD Series 2X8 (16pin)

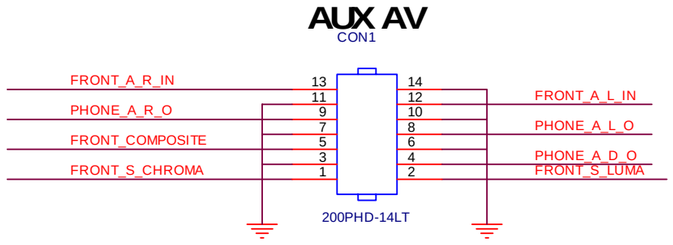


**LINK TO AUX AV PCB 1**

| | | |
|---|---|---|
| Title | AUX AV PCB | |
| Size B | Document Number GF371-XU | Rev A |
| Date: Thursday, November 24, 2005 | Sheet 1 of 1 | |

## D-SUB 37 PIN Board

200PHD Series 2X8 (16pin)

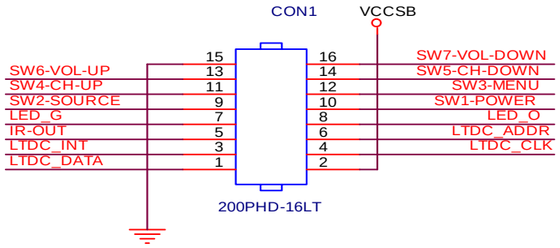


**CTRL Key**

200PHD Series 2X7 (14pin)

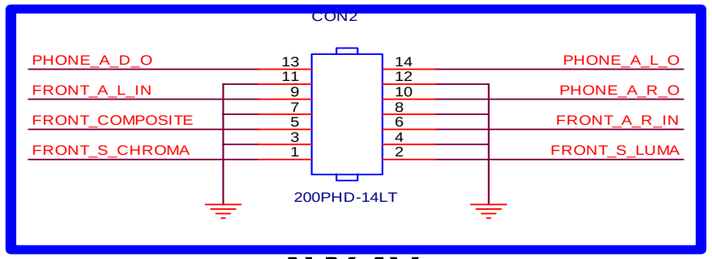


**AUX AV**

200PHD Series 2X4 (8pin)

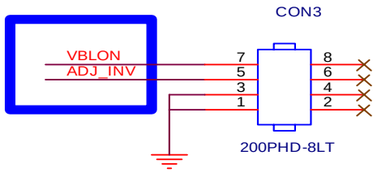


**INVERTER CTRL**

250XH Series 1X4 (4pin)

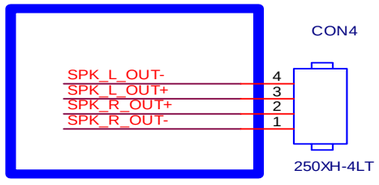


**SPK OUT**

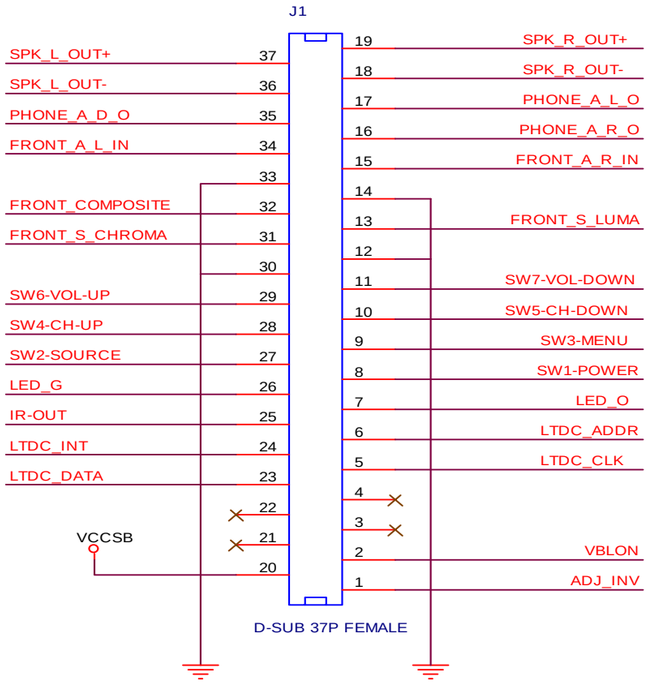


| | | | |
|---|---|---|---|
| Title | CON JUNCT D-SUB 37Pin | | |
| Size Custom | Document Number JK379-UD | | Rev A |
| Date: Friday, September 09, 2005 | Sheet 1 of 1 | | |

# 8. PCB Layout Diagram

## Main Board (Component Side Top)

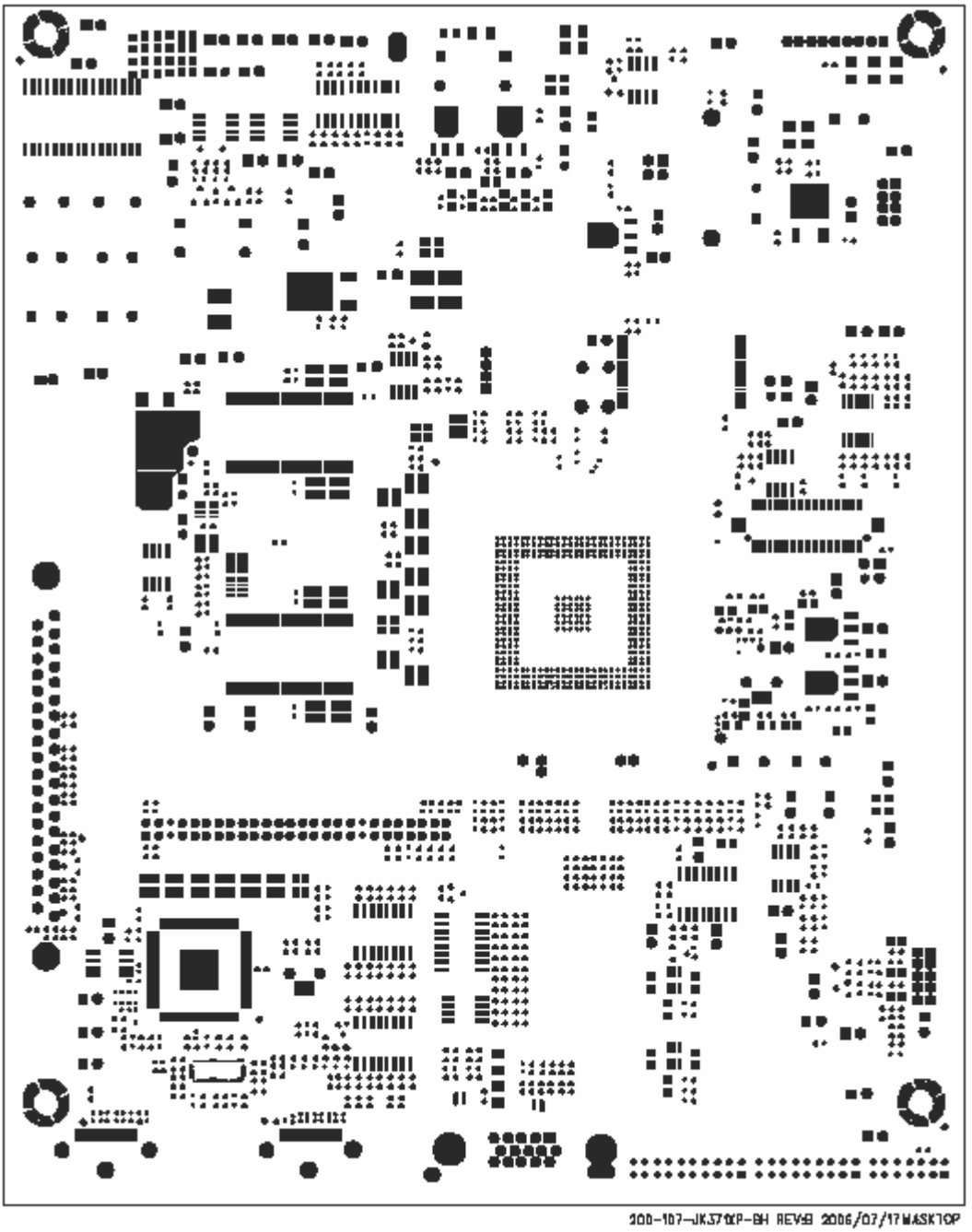

## Main Board (Component Side Bottom)

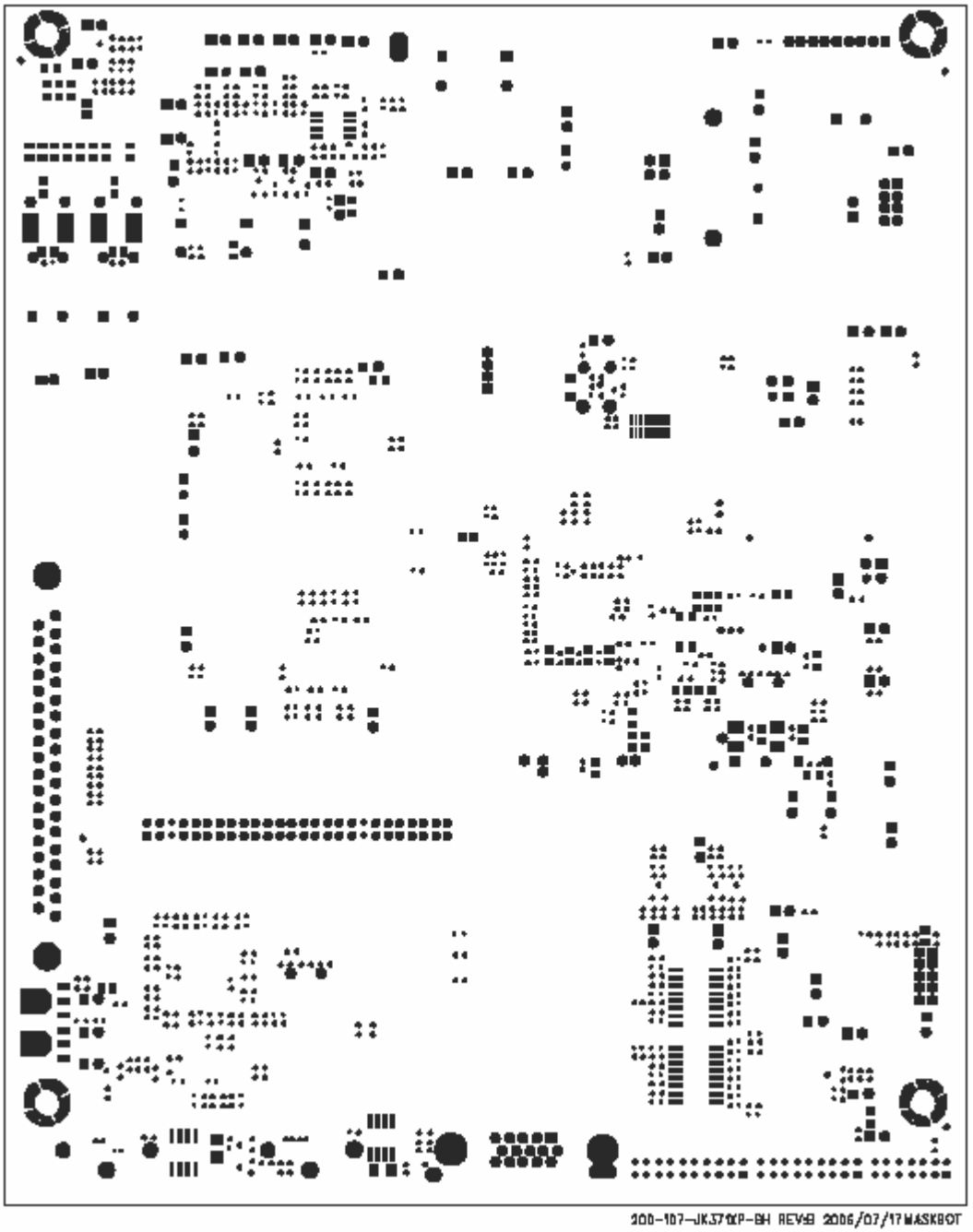


## IO Board L1 component side

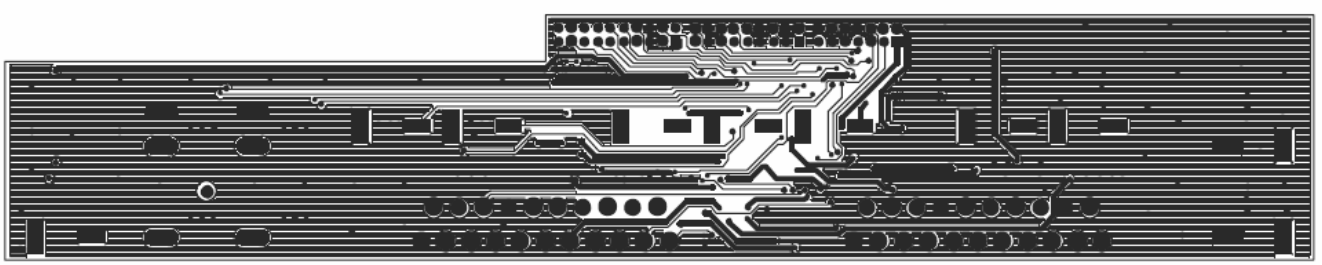

## IO Board L2 GND (COMP.)

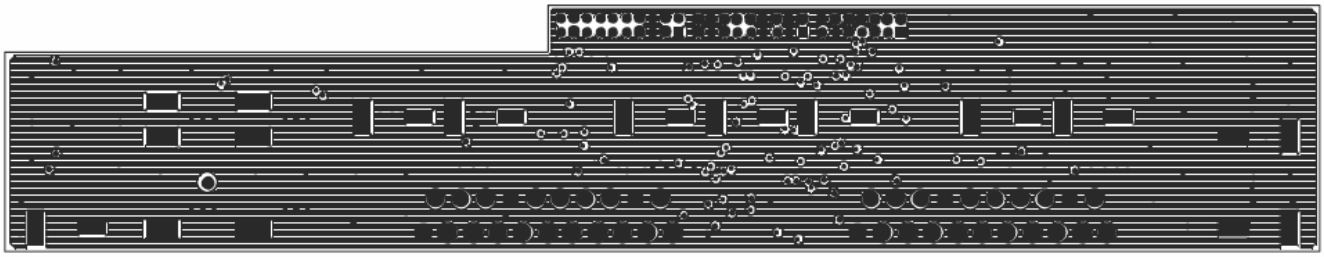

## IO Board L3 VCC (COMP.)

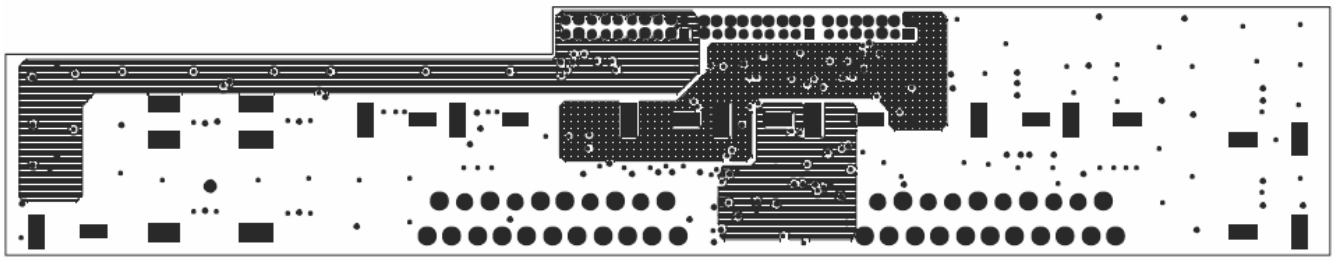

## IO Board L4 soloer side (BOT.)

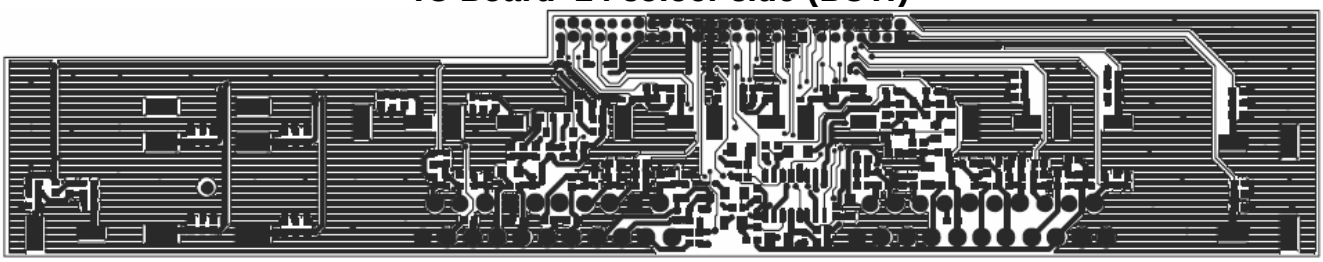

## Keypad Board (Component Side Top)

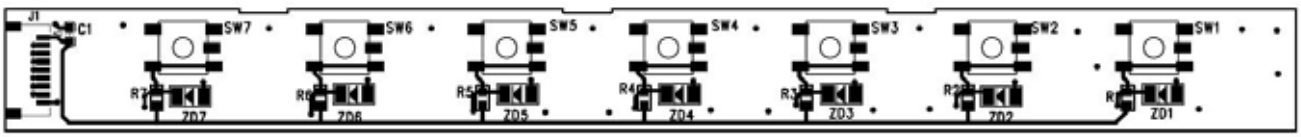


## Keypad Board (Component Side Bottom)

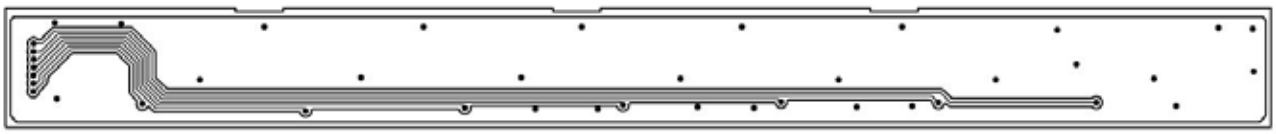

## IR/LED Board (Component Side Top)

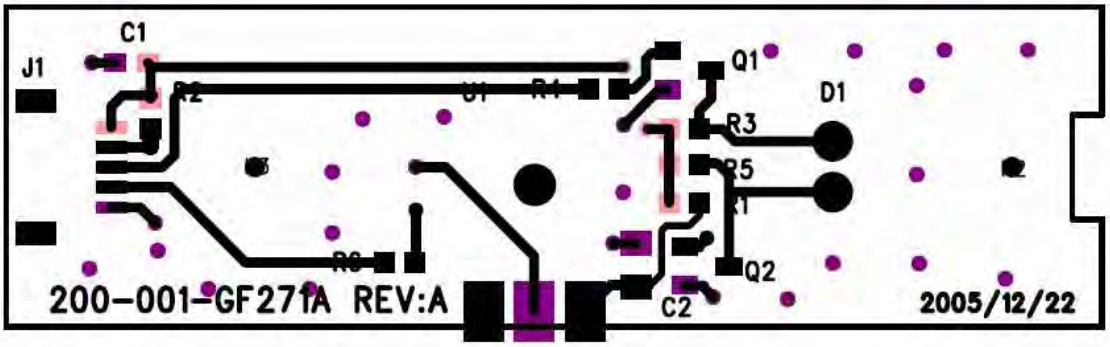


**IR/LED Board (Component Side Bottom)**

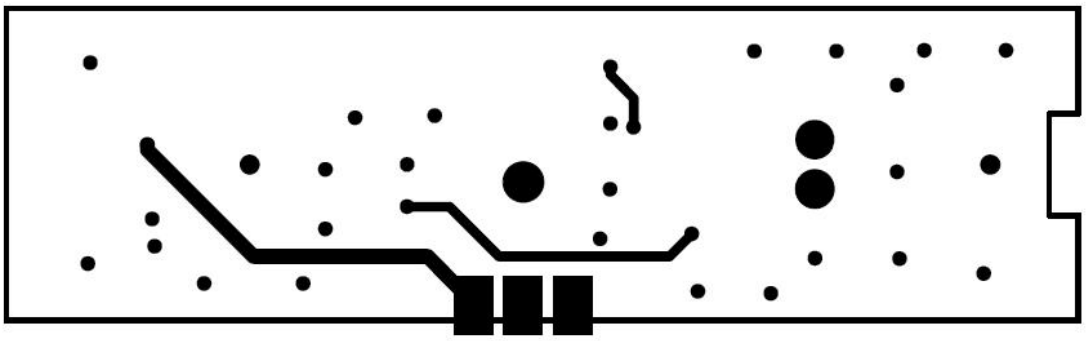

**AUX AV Board (Component Side Top)**

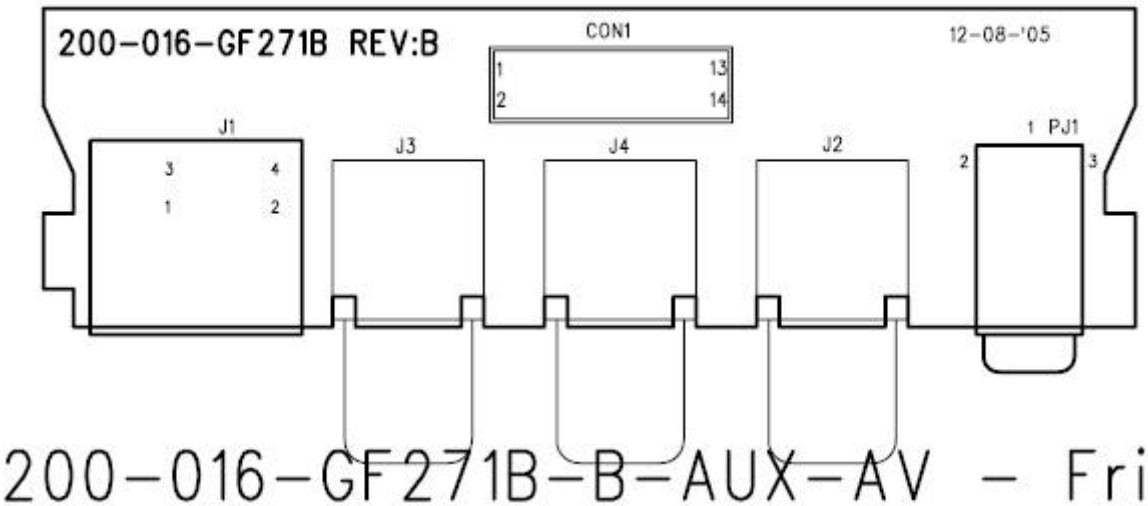

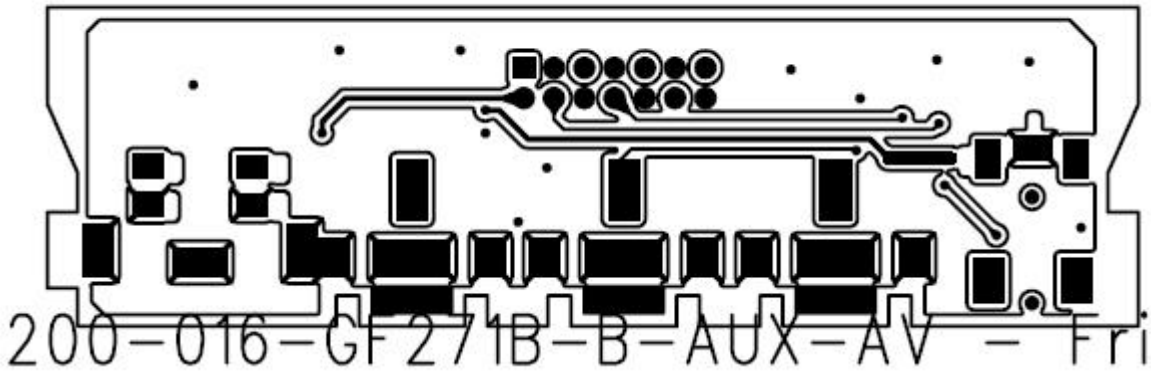


**AUX AV Board (Component Side Bottom)**

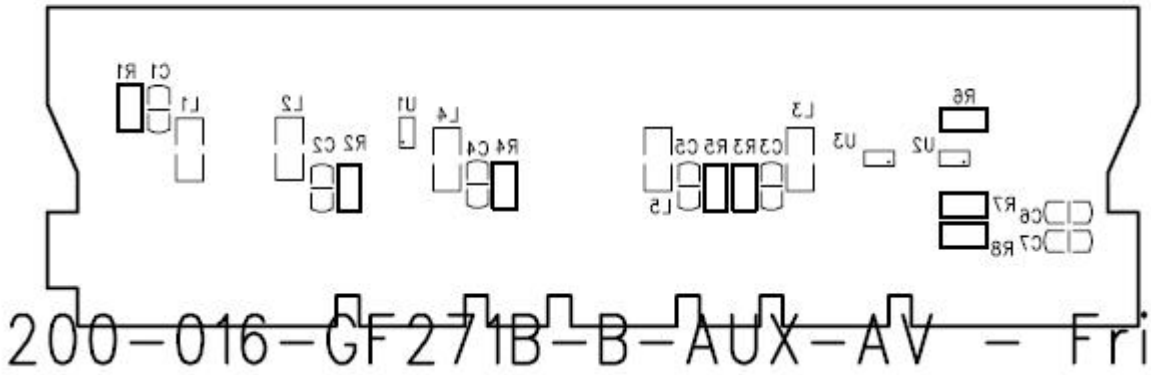


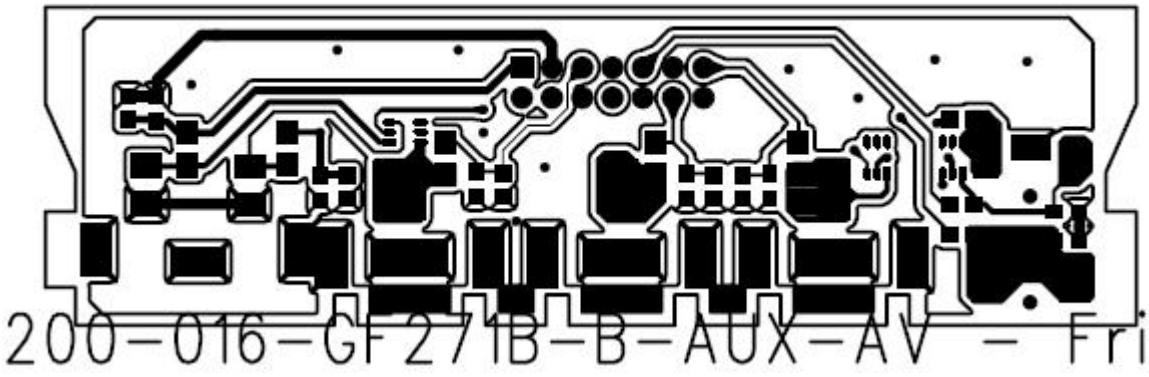


**D-SUB 37 Pin Board (Component Side Top)**

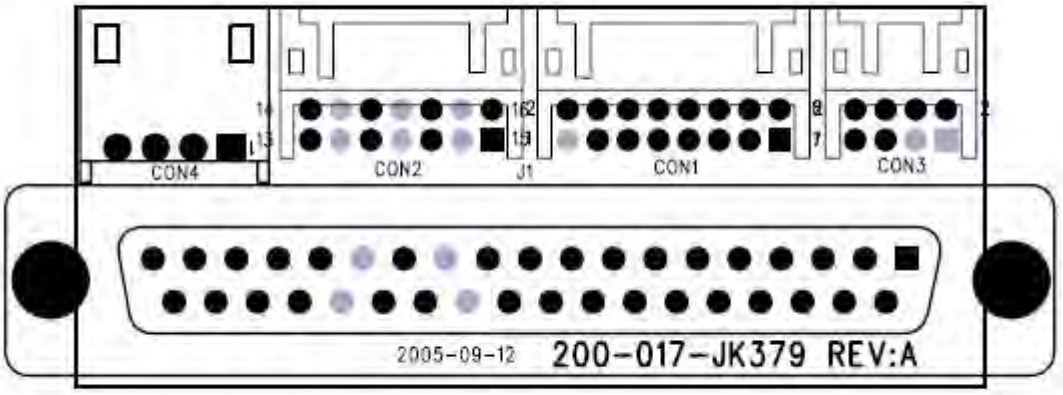

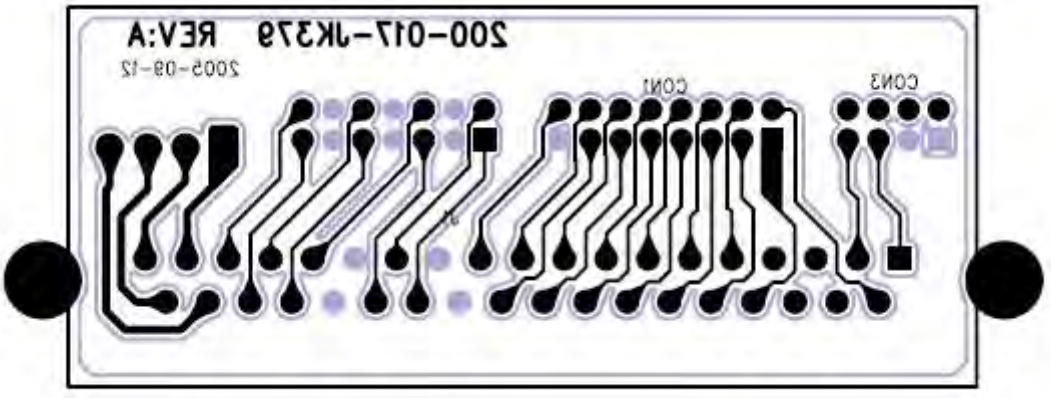
**D-SUB 37 Pin Board (Component Side Bottom)**